Developer Requirements for Mobile Consumer Networking Applications Requirements

Draft Version 1.0.3 – 12 Aug 2004

Open Mobile Alliance

OMA-RD_Developer_Requirements_Mobile_Consumer_Networking_Applications-V1_0_3-20040812-D

© 2004 Open Mobile Alliance Ltd. All Rights Reserved.
Used with the permission of the Open Mobile Alliance Ltd. under the terms as stated in this document.

Use of this document is subject to all of the terms and conditions of the Use Agreement located at http://www.openmobilealliance.org/UseAgreement.html.

Unless this document is clearly designated as an approved specification, this document is a work in process, is not an approved Open Mobile Alliance™ specification, and is subject to revision or removal without notice.

You may use this document or any part of the document for internal or educational purposes only, provided you do not modify, edit or take out of context the information in this document in any manner. Information contained in this document may be used, at your sole risk, for any purposes. You may not use this document in any other manner without the prior written permission of the Open Mobile Alliance. The Open Mobile Alliance authorizes you to copy this document, provided that you retain all copyright and other proprietary notices contained in the original materials on any copies of the materials and that you comply strictly with these terms. This copyright permission does not constitute an endorsement of the products or services. The Open Mobile Alliance assumes no responsibility for errors or omissions in this document.

Each Open Mobile Alliance member has agreed to use reasonable endeavors to inform the Open Mobile Alliance in a timely manner of Essential IPR as it becomes aware that the Essential IPR is related to the prepared or published specification. However, the members do not have an obligation to conduct IPR searches. The declared Essential IPR is publicly available to members and non-members of the Open Mobile Alliance and may be found on the "OMA IPR Declarations" list at http://www.openmobilealliance.org/ipr.html. The Open Mobile Alliance has not conducted an independent IPR review of this document and the information contained herein, and makes no representations or warranties regarding third party IPR, including without limitation patents, copyrights or trade secret rights. This document may contain inventions for which you must obtain licenses from third parties before making, using or selling the inventions. Defined terms above are set forth in the schedule to the Open Mobile Alliance Application Form.

NO REPRESENTATIONS OR WARRANTIES (WHETHER EXPRESS OR IMPLIED) ARE MADE BY THE OPEN MOBILE ALLIANCE OR ANY OPEN MOBILE ALLIANCE MEMBER OR ITS AFFILIATES REGARDING ANY OF THE IPR'S REPRESENTED ON THE "OMA IPR DECLARATIONS" LIST, INCLUDING, BUT NOT LIMITED TO THE ACCURACY, COMPLETENESS, VALIDITY OR RELEVANCE OF THE INFORMATION OR WHETHER OR NOT SUCH RIGHTS ARE ESSENTIAL OR NON-ESSENTIAL.

THE OPEN MOBILE ALLIANCE IS NOT LIABLE FOR AND HEREBY DISCLAIMS ANY DIRECT, INDIRECT, PUNITIVE, SPECIAL, INCIDENTAL, CONSEQUENTIAL, OR EXEMPLARY DAMAGES ARISING OUT OF OR IN CONNECTION WITH THE USE OF DOCUMENTS AND THE INFORMATION CONTAINED IN THE DOCUMENTS.

© 2004 Open Mobile Alliance Ltd. All Rights Reserved.
Used with the permission of the Open Mobile Alliance Ltd. under the terms set forth above.

Contents

1. SCOPE (INFORMATIVE) ... 6

2. REFERENCES ... 7

2.1 NORMATIVE REFERENCES ... 7

2.2 INFORMATIVE REFERENCES ... 7

3. TERMINOLOGY AND CONVENTIONS ... 8

3.1 CONVENTIONS ... 8

3.2 DEFINITIONS ... 8

3.3 ABBREVIATIONS ... 8

4. INTRODUCTION (INFORMATIVE) ... 9

4.1 MOBILE CONSUMER NETWORKING CONVERGENCE ... 9

5. USE CASES (INFORMATIVE) ... 11

5.1 USE CASES HIGHLIGHTING MOBILE INTERACTION WITH ENTERTAINMENT NETWORK ... 11

5.1.1 Use Case, <TPSP, I&E, OTHER> Mobile Initiated Local and Remote Home Entertainment Device Control 11

5.1.2 Use Case, <TPSP, I&E, OTHER > Mobile Initiated Local and Remote Device Control & Monitoring ... 13

5.1.3 Use Case, <TPSP, I&E, OTHER > Mobile Initiated Local and Remote Home A/V Control Featuring EPG .. 14

5.1.4 Use Case, <TPSP, I&E, OTHER > Mobile Entertainment Portal and Interactive Advertising ... 15

5.1.5 Use Case, <TPSP, I&E, OTHER > Home to Mobile Device Notification ... 16

5.1.6 Use Case, <TPSP, I&E, OTHER > Data Synchronization: Local and Remote Game Playing on Mobile Handsets 17

5.1.7 Use Case, <TPSP, I&E, OTHER > Remote Data Synchronization (image/video/audio) Using Mobile Handset 18

5.1.8 Use Case, <TPSP, I&E, OTHER > Continuous Information Access with Mobile Handset ... 19

5.2 USE CASES HIGHLIGHTING SOCIAL APPLICATIONS ... 20

5.2.1 Use Case, <TPSP, I&E, OTHER > Device to Device Communication in Social Contexts ... 21

5.2.2 Use Case, <TPSP, I&E, OTHER > Instant Event Broadcasting from Mobile Handset Through Multiple Channels 22

5.3 USE CASES HIGHLIGHTING DOMESTIC EFFICIENCY, PRODUCTIVITY AND ECONOMICS ... 23

5.3.1 Use Case, <TPSP, I&E, OTHER > Real Time Pricing and Coupons Distribution Using a Mobile Handset ... 23

5.3.2 Use Case, <TPSP, I&E, OTHER > Mobile E-Commerce Real-Time Local Store Inventory Checking ... 24

5.3.3 Use Case, <TPSP, I&E, OTHER > Remote Access to Networked Appliances and Systems Using a Mobile Handset 25

5.4 USE CASES HIGHLIGHTING HEALTH AND MEDICAL ISSUES ... 26

5.4.1 Use Case, <TPSP, I&E, P2P, OTHER > Remote Monitoring of Family Member with Instant Notification ... 27

5.4.2 Use Case, <TPSP, P2P, I&E, OTHER> Remote Instant Medical Information Retrieval ... 28

5.5 USE CASES HIGHLIGHTING SAFETY AND SECURITY ... 29

5.5.1 Use Case, <TPSP, I&E, OTHER > Remote Monitoring and Control of Home Security Systems Using Mobile Handset 29

5.5.2 Use Case, <TPSP, P2P, A&E, OTHER > Remote Instant Security Alert Over Mobile ... 30

5.6 OPEN ISSUES ... 31

6. REQUIREMENTS (NORMATIVE) ... 32

6.1 HIGH-LEVEL FUNCTIONAL REQUIREMENTS ... 32

6.1.1 Security ... 33

6.1.2 Charging ... 33

6.1.3 Administration and Configuration ... 34

6.1.4 Usability ... 34

6.1.5 Interoperability ... 35

6.1.6 Privacy ... 35

6.2 OVERALL SYSTEM REQUIREMENTS ... 35

6.3 SYSTEM ELEMENTS ... 36

6.3.1 Mobile Device Agent ... 36

6.3.2 Mobile Home Agent ... 37

6.3.3 Network interfaces ... 38

© 2004 Open Mobile Alliance Ltd. All Rights Reserved.
Used with the permission of the Open Mobile Alliance Ltd. under the terms as stated in this document.

APPENDIX A. CCHANGE HISTORY (INFORMATIVE) **39**
A.1 APPROVED VERSION HISTORY **39**
A.2 DRAFT/CANDIDATE VERSION <CURRENT VERSION> HISTORY **39**
APPENDIX B. <ADDITIONAL INFORMATION> **40**
B.1 APP HEADERS **40**
B.1.1 More Headers 40

Figures

Figure 1: Example Figure ..... Error! Bookmark not defined.

Tables

Table 1: Affected Areas for <Title> ..... Error! Bookmark not defined.
Table 2: High-Level Functional Requirements **33**
Table 3: High-Level Functional Requirements – Security Items **33**
Table 4: High-Level Functional Requirements – Charging Items **34**
Table 5: High-Level Functional Requirements – Administration and Configuration Items **34**
Table 6: High-Level Functional Requirements – Usability Items **35**
Table 7: High-Level Functional Requirements – Interoperability Items **35**
Table 8: High-Level Functional Requirements – Privacy Items **35**
Table 9: High-Level Functional Requirements – Security Items **35**
Table 10: System Elements **36**
Table 11: Requirements for System Element <A> **37**
Table 12: Requirements for Network Interfaces **38**

© 2004 Open Mobile Alliance Ltd. All Rights Reserved.
Used with the permission of the Open Mobile Alliance Ltd. under the terms as stated in this document.

1. Scope (Informative)

This document presents the requirements for the Mobile device interaction with home networking devices, regarding enabling of mobile initiated operation and control of home appliances and other components of consumer networking.

The overall goal of this requirements document is to define interaction between mobile device such as cellular phone for home network control service in mobile from service provider, technological and end-users' demands. This document contributes the development of mobile home networking solution for Open Mobile Alliance.

The overall goals of mobile home interaction can be stated as:

- Low latency (i.e. as close to real time as possible for quick operation)
- Optimized and efficient use of available wireless resources
- Support of wide variety of use cases that require interaction between a mobile and home networking appliance
- Security
- Mobility
- Bidirectionality of communication
- Unrestricted by content type and media formatting

© 2004 Open Mobile Alliance Ltd. All Rights Reserved.
Used with the permission of the Open Mobile Alliance Ltd. under the terms as stated in this document.

2. References

2.1 Normative References

[RFC2119] "Key words for use in RFCs to Indicate Requirement Levels", S. Bradner, March 1997, URL:http://www.ietf.org/rfc/rfc2119.txt

<< Add/Remove reference rows as needed! >>

2.2 Informative References

<< Add/Remove reference rows as needed! >>

© 2004 Open Mobile Alliance Ltd. All Rights Reserved.
Used with the permission of the Open Mobile Alliance Ltd. under the terms as stated in this document.

3. Terminology and Conventions

3.1 Conventions

The key words “MUST”, “MUST NOT”, “REQUIRED”, “SHALL”, “SHALL NOT”, “SHOULD”, “SHOULD NOT”, “RECOMMENDED”, “MAY”, and “OPTIONAL” in this document are to be interpreted as described in [RFC2119].

All sections and appendixes, except “Scope” and “Introduction”, are normative, unless they are explicitly indicated to be informative.

3.2 Definitions

Mobile	A user held device using services over the wireless interface.
Network Serive Provider	A network operator that provides network services to a mobile device.

3.3 Abbreviations

OMA	Open Mobile Alliance
Xxx	xxx

© 2004 Open Mobile Alliance Ltd. All Rights Reserved.
Used with the permission of the Open Mobile Alliance Ltd. under the terms as stated in this document.

4. Introduction (Informative)

In the last few years, we have seen the emergence of mobile devices and consumer networking of home devices as major growth areas. The low cost of consumer and communication devices has made it possible for consumers to create a variety of home networking solutions suited to their particular environment and needs. There is a clear desire in mobile users to be able to interact with the devices at their home networks from their mobile handsets. Therefore, it is important to define requirements and applications so that we can avoid inter-operability nightmare in the future that results from ad-hoc development of applications and technology.

Before proceeding further, it is important to describe the nature of current consumer networking solutions. We can classify consumer home networks into three categories according to their primary usage:

A. Consumer Entertainment Network:

This network connects devices such as TV, VCR, DVR and STB. The primary usage of the entertainment network is to enable sharing the audio and video contents between various devices. These devices currently use isochronous connections such as IEEE1394 for distributing high-speed video/audio contents. Wireless connectivity using various wireless standards such as IEEE 802.11a/b/g etc., is also likely to become popular in the near future. The contents are generally encoded in MPEG format.

B. Consumer Computing Network:

This network connects computing devices such as PCs, and handheld devices. The primary purpose of these devices is to enable data applications such as banking, interactive games, web browsing etc. The formats and protocols used by devices generally include TCP/IP, HTTP/HTML and XML. The second usage of these devices is to process and display audio/video contents that are generally of high bit rate such as games, still pictures, and video clips.

C. Consumer Appliance Network:

This network connects devices such as home security systems, cameras, sensors, and actuators for home automation, refrigerators, and other home appliances. The primary purpose to network these devices together is to gather data about their operation, monitor certain part of the house, generate alarm signals when appropriate, and signal other devices to start or stop certain actions. These devices generally require low throughput from the network.

4.1 Mobile Consumer Networking Convergence

Convergence of mobile and consumer networking will allow consumer networks to be managed from the outside world using mobile handsets. This will enable the vision of pervasive computing i.e., access to the network resources from anywhere at any time from any device. Figure 1 below depicts the pervasive computing, which extends from home to the outside world via Internet and other public area networks.

© 2004 Open Mobile Alliance Ltd. All Rights Reserved.
Used with the permission of the Open Mobile Alliance Ltd. under the terms as stated in this document.

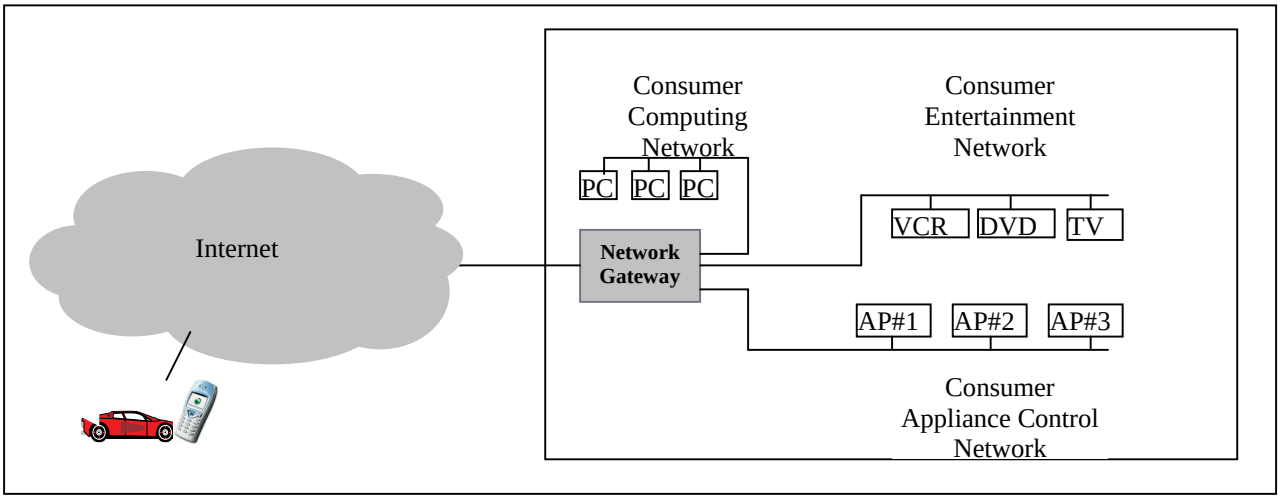

Figure 1: Integration of Converged Consumer Networking with the Outside world

This document does not specify any particular implementation technology for connecting consumer devices. Instead the focus is purely on defining application level transactions between a mobile device, and the consumer network devices. These interactions can be through an enabling home gateway, or peer to peer between two communicating devices.

© 2004 Open Mobile Alliance Ltd. All Rights Reserved.
Used with the permission of the Open Mobile Alliance Ltd. under the terms as stated in this document.

5. Use Cases (Informative)

In this section, we discuss various scenarios and use cases for the converged mobile consumer network. The use cases described in the paper present a comprehensive vision of how the interaction between mobile handsets and consumer networks will enable greater flexibility, access to new applications, and personal control for a wide variety of customers, situations and devices.

We have identified five application domains, namely: Entertainment, social, domestic productivity and economics, health, and safety. The use cases for a particular application domain are grouped together in a single section. For each use case, we describe actors, pre-conditions, post conditions and a brief action flow. Alternate action flows are possible for many use cases, but these haven't been discussed. For each use case, we provide a generic scenario, and when applicable we also describe specific narrative scenario(s).

5.1 Use Cases Highlighting Mobile Interaction with Entertainment Network

Home entertainment is perhaps the most important area for average consumer. We have identified the following use cases for the home entertainment network:

- Mobile Initiated Local and Remote Entertainment Device Control
- Mobile Initiated Local and Remote Device Control & Monitoring
- Mobile Initiated Local and Remote Device Control featuring Electronic Program Guide (EPG)
- Mobile Entertainment Portal & Interactive Advertising
- Home to Mobile Device Notification
- Local and Remote Data Synchronization Using Mobile Handsets
- Local and Remote Game Playing
- Supporting Information
- Continuous Information Access using Mobile handset

Each use case is discussed in detail below. It should note that for each use case only most relevant pre and post conditions, and action steps have been identified.

5.1.1 Use Case, <TPSP, I&E, OTHER> Mobile Initiated Local and Remote Home Entertainment Device Control

5.1.1.1 Short Description

A user is able to control the devices and the functions of entertainment systems connected to his home network using his mobile handset. He may initiate the action to

© 2004 Open Mobile Alliance Ltd. All Rights Reserved.
Used with the permission of the Open Mobile Alliance Ltd. under the terms as stated in this document.

record or playback from one device located in one room to another device located in another room.

5.1.1.2 Actors

A user, a mobile handset, home gateway, home entertainment device(s).

5.1.1.3 Actor Specific Issues

The user can initiate actions at any time without any knowledge of home device.

5.1.1.4 Actor Specific Benefits

The user can initiate action without knowing the state of home device.

5.1.1.5 Pre-conditions

The user has necessary access control privileges to modify and control home network components.

5.1.1.6 Post-conditions

The user would have carried out the desired action to record, delete or re-configure an entertainment device on his home network.

5.1.1.7 Normal Action Flow

1. A user decides that he needs to record a certain program.
2. He takes out his mobile handset device and connects to the (home network gateway).
3. The user identifies one or more devices and registers the action event with each of them.
4. The user de-registers from the (home network gateway).
5. The programmed devices automatically execute the programmed event at the prescribed time/day.

5.1.1.8 Alternate Action Flow

None.

5.1.1.9 Operational and Quality of Experience Requirements

It must be easy and seamless for the user to download, store and execute applications on the handset.

© 2004 Open Mobile Alliance Ltd. All Rights Reserved.
Used with the permission of the Open Mobile Alliance Ltd. under the terms as stated in this document.

5.1.2 Use Case, <TPSP, I&E, OTHER > Mobile Initiated Local and Remote Device Control & Monitoring

5.1.2.1 Short Description

A user is able to control and monitor the functions of home entertainment systems connected to the home network using a mobile handset. For example, a user may initiate the action to prohibit or inhibit certain channels from being seen by his guest and/or kids.

5.1.2.2 Actors

A user, a mobile handset, home gateway, home entertainment device(s).

5.1.2.3 Actor Specific Issues

The user can initiate actions at any time without any knowledge of home device.

5.1.2.4 Actor Specific Benefits

The user can initiate action without knowing the state of home device.

5.1.2.5 Pre-conditions

The user has necessary access permissions to modify and control home network components.

5.1.2.6 Post-conditions

The user would have carried out the desired action to monitor the home network devices and if appropriate would have configured them to his likings.

5.1.2.7 Normal Action Flow

1. A user decides that he needs to make sure that his kids cannot watch certain channels.
2. He takes out his hand held mobile handset and connects to the network.
3. The user identifies one or more devices and reconfigures the device(s) with his preference.
4. The home device executes the commands and changes the channels as configured.
5. The user de-registers from the network.

5.1.2.8 Alternate Action Flow

None.

© 2004 Open Mobile Alliance Ltd. All Rights Reserved.
Used with the permission of the Open Mobile Alliance Ltd. under the terms as stated in this document.

5.1.2.9 Operational and Quality of Experience Requirements

It must be easy and seamless for the user to download, store and execute applications on the handset.

5.1.3 Use Case, <TPSP, I&E, OTHER > Mobile Initiated Local and Remote Home A/V Control Featuring EPG

5.1.3.1 Short Description

A user is able to download the EPG (Electronic Program Guide) information to his mobile handheld, and use that information to control the record and play operation of a/v equipment at his home network.

5.1.3.2 Actors

A user, a mobile handset, home gateway, home entertainment device(s)

5.1.3.3 Actor Specific Issues

The user can initiate actions at any time without any knowledge of home device.

5.1.3.4 Actor Specific Benefits

The user can initiate action without knowing the state of home device.

5.1.3.5 Pre-conditions

The user has necessary access permissions to modify and control home network components

5.1.3.6 Post-conditions

The user would have carried out the desired action to program the A/V device connected to his home network.

5.1.3.7 Action Flow

1. A user decides that he needs to watch a certain program.
2. The user takes out his mobile handset and connects to the network.
3. The user downloads the EPG to his mobile handset.
4. The user searches his favourite program and makes a decision to record it.
5. He identifies one or more devices and initiates actions to play and record the selected program.
6. The user de-registers from the network.

© 2004 Open Mobile Alliance Ltd. All Rights Reserved.
Used with the permission of the Open Mobile Alliance Ltd. under the terms as stated in this document.

5.1.3.8 Alternate Flows

None.

5.1.3.9 Operational and Quality of Experience Requirements

It must be easy and seamless for the user to download, store and execute applications on the handset.

5.1.4 Use Case, <TPSP, I&E, OTHER > Mobile Entertainment Portal and Interactive Advertising

5.1.4.1 Short Description

A user is able to record the advertising information being broadcast on a television channel to his mobile handset, and access it later for ordering the advertised product or services.

5.1.4.2 Actors

A user, a mobile handset, home gateway, home entertainment device(s), Remote information server

5.1.4.3 Actor Specific Issues

The user can initiate actions at any time without any knowledge of home device.

5.1.4.4 Actor Specific Benefits

The user can initiate action without knowing the state of home device.

5.1.4.5 Pre-conditions

1. The user has ability to make decision about buying a product, and the ability to pay for it.

2. The user has privileged access to the mobile handset to be able to purchase a product from the location.

5.1.4.6 Post-conditions

The user would have recorded the necessary information, and have ordered the product or services through his handheld device.

5.1.4.7 Normal Action Flow

1. A user watches a certain television program.
2. A user registers his mobile handset with his home networking gateway while at home.
3. The advertising information is automatically loaded in the digital form in his mobile handset.

© 2004 Open Mobile Alliance Ltd. All Rights Reserved.
Used with the permission of the Open Mobile Alliance Ltd. under the terms as stated in this document.

4. The user likes the product being advertised in a particular channel, and saves the ordering information by pressing a selection button on his mobile handset.
5. The remote server digitally sends more detailed information about price and features of the product, and this information is stored in the user's mobile handset.
6. After watching the program, the user goes back to his saved information. He reviews the product information at his convenient time, and decides to place an order.
7. The user places the order for the product and services.

5.1.4.8 Alternate Action Flow

None

5.1.4.9 Operational and Quality of Experience Requirements

It must be easy and seamless for the user to download, store and execute applications on the handset.

5.1.5 Use Case, <TPSP, I&E, OTHER > Home to Mobile Device Notification

5.1.5.1 Short Description

A user is able to get the selected information such as game scores, game results, lottery results, and weather forecasts etc. to his mobile handset at a remote location.

5.1.5.2 Actors

A user, a mobile handset, home gateway, home entertainment device(s)

5.1.5.3 Actor Specific Issues

The user can initiate actions at any time without any knowledge of home device.

5.1.5.4 Actor Specific Benefits

The user can initiate action without knowing the state of home device.

5.1.5.5 Pre-conditions

The user has necessary access permissions to modify and control home network components.

5.1.5.6 Post-conditions

The user would have obtained the necessary information without being at his home.

5.1.5.7 Normal Action Flow

1. The user is at a remote location.

© 2004 Open Mobile Alliance Ltd. All Rights Reserved.
Used with the permission of the Open Mobile Alliance Ltd. under the terms as stated in this document.

2. He connects to his home network from his mobile handset and notices an event being broadcast whose result he is interested in knowing on a regular basis. (E.g., his favourite team playing a match against its bitter rival (or any similar event).
3. The user instructs the home gateway to direct the event result information to his mobile handset.
4. The home gateway periodically forwards the selected information to the user's mobile handset at a remote location.
5. The event finishes and the home gateway stops the forwarding of the result to the user's mobile handset.
6. Alternatively, the user is no longer interested in the score, and the user cancels the forwarding action with the home gateway.

5.1.5.8 Alternate Action Flow

None

5.1.5.9 Operational and Quality of Experience Requirements

It must be easy and seamless for the user to download, store and execute applications on the handset.

5.1.6 Use Case, <TPSP, I&E, OTHER > Data Synchronization: Local and Remote Game Playing on Mobile Handsets

5.1.6.1 Short Description

A user is able to continue his gaming sessions while on the move, and can transfer game sessions back from his mobile handset to his home controller without interruption.

5.1.6.2 Actors

A user, a mobile handset, home gateway, home entertainment device(s), the gaming device

5.1.6.3 Actor Specific Issues

The user can initiate actions at any time without any knowledge of home device.

5.1.6.4 Actor Specific Benefits

The user can initiate action without knowing the state of home device.

5.1.6.5 Pre-conditions

The user has necessary access permissions to modify and control home network components.

© 2004 Open Mobile Alliance Ltd. All Rights Reserved.
Used with the permission of the Open Mobile Alliance Ltd. under the terms as stated in this document.

5.1.6.6 Post-conditions

The user would have experienced the thrill of playing his favourite game even when he had to change many locations.

5.1.6.7 Normal Action Flow

1. The user is playing his favourite game at his home.
2. The user has to leave his home so he instructs his gaming device to transfer the game session to his mobile handset.
3. The user plays his favourite game without any interruption while being on the move.
4. The user returns home, and instructs his mobile gaming device to transfer the session to the home controller.
5. The user finishes the game, and ends the game.

5.1.6.8 Operational and Quality of Experience Requirements

It must be easy and seamless for the user to download, store and execute applications on the handset.

5.1.7 Use Case, <TPSP, I&E, OTHER > Remote Data Synchronization (image/video/audio) Using Mobile Handset

5.1.7.1 Short Description

A user is able to store information linked with the content of a TV program to his mobile handset using a selection mechanism. For example, a user may transfer a recipe to his mobile handset while watching a food network TV program.

5.1.7.2 Actors

A user, a mobile handset, home gateway, home entertainment device(s)

5.1.7.3 Actor Specific Issues

The user can initiate actions at any time without any knowledge of home device.

5.1.7.4 Actor Specific Benefits

The user can initiate action without knowing the state of home device.

© 2004 Open Mobile Alliance Ltd. All Rights Reserved.
Used with the permission of the Open Mobile Alliance Ltd. under the terms as stated in this document.

5.1.7.5 Pre-conditions

The user has necessary access permissions to modify and control home network components.

5.1.7.6 Post-conditions

The user would have stored the data linked with a particular program to his mobile handset.

5.1.7.7 Normal Action Flow

1. The user is watching a TV program in which host is describing a certain method to prepare food.
2. The TV displays a synchronize symbol at the right hand corner of the TV.
3. The user picks up his mobile handset, and presses the sync button.
4. The data linked with the program is stored in the mobile handset, which the user can view at some other time.

5.1.7.8 Alternate Action Flow

None

5.1.7.9 Operational and Quality of Experience Requirements

It must be easy and seamless for the user to download, store and execute applications on the handset.

5.1.8 Use Case, <TPSP, I&E, OTHER > Continuous Information Access with Mobile Handset

5.1.8.1 Description

A user is able to get an update via mobile handset to certain information such as delayed flight, road conditions etc. which is critical to him. The user can make/update his decisions based on this information.

5.1.8.2 Actors

A user, a mobile handset, home gateway, home entertainment device(s)

5.1.8.3 Actor Specific Issues

The user can initiate actions at any time without any knowledge of home device.

5.1.8.4 Actor Specific Benefits

The user can initiate action without knowing the state of home device.

© 2004 Open Mobile Alliance Ltd. All Rights Reserved.
Used with the permission of the Open Mobile Alliance Ltd. under the terms as stated in this document.

5.1.8.5 Actor Specific Issues

The user can initiate actions at any time without any knowledge of home device.

5.1.8.6 Actor Specific Benefits

The user can initiate action without knowing the state of home device.

5.1.8.7 Pre-conditions

The user has necessary access permissions to modify and control home network components.

5.1.8.8 Post-conditions

The user would have received the critical information on his mobile handset, and would have taken the corrective actions.

5.1.8.9 Normal Action Flow

1. The user is about to travel to a different location.
2. The user instructs his home gateway to obtain certain information from the weather channel, and the flight delays broadcast from the local airport.
3. The gateway sends this information to the user's mobile handset. The user continuously monitors the information about the flight delays and cancellations.
4. The user notices several hours delay in the departure time of the flight, and decides to stay longer at the shopping mall where he is shopping.
5. The user is able to forward his changed arrival time to his contacts at the other end.

5.1.8.10 Alternate Action Flow

None.

5.1.8.11 Operational and Quality of Experience Requirements

It must be easy and seamless for the user to download, store and execute applications on the handset.

5.2 Use Cases Highlighting Social Applications

Interaction between a mobile handset and home networking is expected to play a useful role in many social scenarios. We have identified the following uses cases for entertainment networks:

- Device-to-device communication in social contexts
- Instant event broadcasting to friends through multiple channels

© 2004 Open Mobile Alliance Ltd. All Rights Reserved.
Used with the permission of the Open Mobile Alliance Ltd. under the terms as stated in this document.

5.2.1 Use Case, <TPSP, I&E, OTHER > Device to Device Communication in Social Contexts

5.2.1.1 Short Description

A user is able to transfer audio and video information from a digital camera built in his mobile handset at a remote location to his home network. Thus, audio/video information can be instantly shared with other family members sitting in the user's home.

5.2.1.2 Actors

A user, a handset with in built audio/video camera, home gateway, home entertainment device(s)

5.2.1.3 Actor Specific Issues

The user can initiate actions at any time without any knowledge of home device.

5.2.1.4 Actor Specific Benefits

The user can initiate action without knowing the state of home device.

5.2.1.5 Pre-conditions

The user has necessary access permissions to transfer information to his home network components.

5.2.1.6 Post-conditions

The user would have transferred the picture from a remote location to his home server to share with other family members.

5.2.1.7 Normal Action Flow

1. The user is at a remote location watching an important show/event.
2. The user shoots the event with his digital camera built in his mobile handset.
3. The user transfers the recordings to his home gateway.
4. The home gateway notifies the family members about the arrival of online contents by flashing a new symbol.
5. The family members change the channel and watch the event from the home.

5.2.1.8 Alternate Action Flow

None.

© 2004 Open Mobile Alliance Ltd. All Rights Reserved.
Used with the permission of the Open Mobile Alliance Ltd. under the terms as stated in this document.

5.2.1.9 Operational and Quality of Experience Requirements

It must be easy and seamless for the user to download, store and execute applications on the handset.

5.2.2 Use Case, <TPSP, I&E, OTHER > Instant Event Broadcasting from Mobile Handset Through Multiple Channels

5.2.2.1 Short Description

A user records certain social events using the camera built-in his mobile handset, and forwards this to his home networks at his home. This information is then re-broadcast to other friends and relatives at different locations.

5.2.2.2 Actor Specific Issues

The user can initiate actions at any time without any knowledge of home device.

5.2.2.3 Actor Specific Benefits

The user can initiate action without knowing the state of home device.

5.2.2.4 Actors

A user, a mobile handset with built-in audio/video camera, home gateway, home entertainment device(s), home gateway of other co-operative users

5.2.2.5 Pre-conditions

The user has necessary access permissions to transfer information to his home network components. The user also has appropriate permission, and access control to broadcast contents to his friends/relatives.

5.2.2.6 Post-conditions

The user would have transferred the picture from a remote location to his home server to share with his friends/relatives.

5.2.2.7 Normal Action Flow

1. The user is at a remote location watching an important show/event.
2. The user shoots the event with his digital camera built in his mobile handset.
3. The user transfers the recordings to his home gateway.
4. The user sends an invitation to his friends to receive the recording.
5. The friends then accept the invitation to receive the digital contents.
6. The user's home gateway broadcasts digital multi-media contents to all friends who accepted the invitation to receive.

© 2004 Open Mobile Alliance Ltd. All Rights Reserved.
Used with the permission of the Open Mobile Alliance Ltd. under the terms as stated in this document.

5.2.2.8 Alternate Action Flow

None

5.2.2.9 Operational and Quality of Experience Requirements

It must be easy and seamless for the user to download, store and execute applications on the handset.

5.3 Use Cases Highlighting Domestic Efficiency, Productivity and Economics

Interaction between mobile and consumer networking devices is expected to play a useful role in increasing domestic efficiency, productivity and managing individual finances. We have identified the following uses cases for converged mobile consumer networking in these areas:

- Real-Time Pricing & Coupons Distribution Using a Mobile Handset
- Mobile E-Commerce Real-Time Local Store Inventory Checking
- Remote Access to Networked Appliances and Home Systems Using a Mobile Handset

5.3.1 Use Case, <TPSP, I&E, OTHER > Real Time Pricing and Coupons Distribution Using a Mobile Handset

5.3.1.1 Short Description

A user is able to transfer electronic coupons to his mobile handset at a remote location from his home server. The home server uses mobile location information to send only coupons that are valid and applicable to current user location.

5.3.1.2 Actors

A user, a mobile handset, home gateway, home computing device(s)

5.3.1.3 Actor Specific Issues

The user can initiate actions at any time without any knowledge of home device.

5.3.1.4 Actor Specific Benefits

The user can initiate action without knowing the state of home device.

5.3.1.5 Pre-conditions

The user has necessary access permissions to transfer information to his home network components.

5.3.1.6 Post-conditions

The user would have obtained the coupons in his mobile handset at a remote location from his home server to get discount at the store.

© 2004 Open Mobile Alliance Ltd. All Rights Reserved.
Used with the permission of the Open Mobile Alliance Ltd. under the terms as stated in this document.

5.3.1.7 Action Flow

1. The user is at a remote location to shop certain goods.
2. The mobile transfers location information to the home server.
3. The home server interprets location information and sends previously collected electronic store coupons to the mobile handset.
4. The user transfers the electronic coupons to store at the time of payment, and purchases the goods with applicable discount.

5.3.1.8 Alternate Action Flow

None

5.3.1.9 Operational and Quality of Experience Requirements

It must be easy and seamless for the user to download, store and execute applications on the handset.

5.3.2 Use Case, <TPSP, I&E, OTHER > Mobile E-Commerce Real-Time Local Store Inventory Checking

5.3.2.1 Short Description

A user is able to transfer electronic shopping list to his mobile handset at a remote location from his home server. He uses this information to organise shopping and compare prices between two different stores to get the best deals.

5.3.2.2 Actors

A user, a mobile handset, home server, home computing device(s)

5.3.2.3 Actor Specific Issues

The user can initiate actions at any time without any knowledge of home device.

5.3.2.4 Actor Specific Benefits

The user can initiate action without knowing the state of home device.

5.3.2.5 Pre-conditions

The user has necessary access permissions to transfer information to his home network components.

© 2004 Open Mobile Alliance Ltd. All Rights Reserved.
Used with the permission of the Open Mobile Alliance Ltd. under the terms as stated in this document.

5.3.2.6 Post-conditions

The user would have obtained the shopping in his mobile handset at a remote location from his home server to get the best prices while shopping.

5.3.2.7 Normal Action Flow

1. The user is at a store in a remote location to shop certain goods.
2. The user requests transfer of shopping list from his home server to the mobile handset.
3. The home server downloads the shopping list to the mobile handset.
4. The mobile handset sorts the list based on their location in store and shows the availability, price, and alternative products along with a simple store map
5. The user activates the mobile handset again to check other local store availability, and price of items that are not available at this store
7. The user completes the shopping of items in his shopping list.

5.3.2.8 Alternate Action Flow

None.

5.3.2.9 Operational and Quality of Experience Requirements

It must be easy and seamless for the user to download, store and execute applications on the handset.

5.3.3 Use Case, <TPSP, I&E, OTHER > Remote Access to Networked Appliances and Systems Using a Mobile Handset

5.3.3.1 Short Description

A user is able to control networked appliances using his mobile handset from a remote location. For example, the user can program his coffee maker to keep coffee ready when he comes back from the office. A user can start a dryer or a washer at a certain time. He can adjust cooling or heating to get the right temperature on his returns from office.

5.3.3.2 Actors

A user, a mobile handset, home server, home computing device(s)

5.3.3.3 Actor Specific Issues

The user can initiate actions at any time without any knowledge of home device.

5.3.3.4 Actor Specific Benefits

The user can initiate action without knowing the state of home device.

© 2004 Open Mobile Alliance Ltd. All Rights Reserved.
Used with the permission of the Open Mobile Alliance Ltd. under the terms as stated in this document.

5.3.3.5 Pre-conditions

The user has necessary access permissions to transfer information to his home network components.

5.3.3.6 Post-conditions

The user would have started or stopped the certain operation on connected appliances in his home using his mobile handset.

5.3.3.7 Normal Action Flow

1. The user is at a remote location away from his home, and is driving towards his home.
2. The user programs the coffee maker to start making coffee a few minutes before his arrival in his home using his mobile handset.
3. The user starts oven cycles so that oven is ready for baking or for cooking food when he returns home.
4. The user adjusts the home temperature of his home using the mobile handset.
5. The user completes the desired actions on the connected appliance.

5.3.3.8 Alternate Action Flow

None.

5.3.3.9 Operational and Quality of Experience Requirements

It must be easy and seamless for the user to download, store and execute applications on the handset.

5.4 Use Cases Highlighting Health and Medical Issues

Health being a primary concern of most families, it is natural that many applications will be written to address this area. We have identified the following uses cases involving mobile handsets and consumer networks in this area:

- Remote Monitoring of Family Member with Instant Notification
- Remote Instant Medical Information Retrieval Using Mobile Handset

© 2004 Open Mobile Alliance Ltd. All Rights Reserved.
Used with the permission of the Open Mobile Alliance Ltd. under the terms as stated in this document.

5.4.1 Use Case, <TPSP, I&E, P2P, OTHER > Remote Monitoring of Family Member with Instant Notification

5.4.1.1 Short Description

A user is able to monitor the medical condition of a family member and get notification over a mobile handset. The user is able to access the medical data using a mobile handset and take appropriate action to deal with the medical emergency.

5.4.1.2 Actors

A user, a mobile handset, home server, home computing device(s)

5.4.1.3 Actor Specific Issues

The user can initiate actions at any time without any knowledge of home device.

5.4.1.4 Actor Specific Benefits

The user can initiate action without knowing the state of home device.

5.4.1.5 Pre-conditions

The user has necessary access permissions to transfer information to his home network components.

5.4.1.6 Post-conditions

The user would have taken necessary action to deal with medical emergency.

5.4.1.7 Normal Action Flow

1. The user is at a remote location away from his home or office.
2. The user receives a notification about the change in medical condition of a family member on his mobile handset.
3. The user connects to his home server using mobile handset and downloads the data collected that help him understand the event that caused the alarm.
4. The user notifies the hospital to dispatch the ambulance to attend to the medical emergency if needed.
5. The user transfers the medical data about the event to doctors and hospital computers from his mobile handset
6. The user successfully deals with a major emergency situation.

5.4.1.8 Alternate Action Flow

None

© 2004 Open Mobile Alliance Ltd. All Rights Reserved.
Used with the permission of the Open Mobile Alliance Ltd. under the terms as stated in this document.

5.4.1.9 Operational and Quality of Experience Requirements

It must be easy and seamless for the user to download, store and execute applications on the handset.

5.4.2 Use Case, <TPSP, P2P, I&E, OTHER> Remote Instant Medical Information Retrieval

5.4.2.1 Short Description

A user is able to get the past medical data and history of medical condition of self or about a family member from his home server using a mobile handset. The user is able to provide this data on demand to a new doctor for him to take appropriate action.

5.4.2.2 Actors

A user, a mobile handset, home server, home computing device(s)

5.4.2.3 Actor Specific Issues

The user can initiate actions at any time without any knowledge of home device.

5.4.2.4 Actor Specific Benefits

The user can initiate action without knowing the state of home device.

5.4.2.5 Pre-conditions

The user has necessary access permissions to transfer information to his home network components.

5.4.2.6 Post-conditions

The user would have taken necessary action to deal with medical emergency.

5.4.2.7 Normal Action Flow

1. The user is at a remote location very far away from his home.
2. The user develops a new medical condition and needs medical help.
3. The user connects to his home server using mobile handset and down loads the location of a doctor or hospital near by.
4. The user also retrieves the past medical data and his health history from his server using his mobile handset.
5. The user is able to provide this data on demand to a new doctor for him to take appropriate action.
6. The user successfully deals with the medical emergency

© 2004 Open Mobile Alliance Ltd. All Rights Reserved.
Used with the permission of the Open Mobile Alliance Ltd. under the terms as stated in this document.

5.4.2.8 Alternate Action Flow

None.

5.4.2.9 Operational and Quality of Experience Requirements

It must be easy and seamless for the user to download, store and execute applications on the handset.

5.5 Use Cases Highlighting Safety and Security

Safety and security of homes is a primary concern of many families, it is natural that many applications will be written to address this area. We have identified the following uses cases involving mobile handsets and consumer networks in this area:

- Remote Monitoring and Control of Home Security Systems Using Mobile Handset
- Remote Instant Security Alert Over Mobile Handset

5.5.1 Use Case, <TPSP, I&E, OTHER > Remote Monitoring and Control of Home Security Systems Using Mobile Handset

5.5.1.1 Short Description

A user is able to monitor the security systems at his home and change the activation state of the system as needed.

5.5.1.2 Actor Specific Issues

The user can initiate actions at any time without any knowledge of home device.

5.5.1.3 Actor Specific Benefits

The user can initiate action without knowing the state of home device.

5.5.1.4 Actors

A user, a mobile handset, home security systems, home gateway server

5.5.1.5 Pre-conditions

The user has necessary access permissions to transfer information to his home network components.

5.5.1.6 Post-conditions

The user would have taken necessary action to deal with medical emergency.

5.5.1.7 Normal Action Flow

1. The user is at a remote location away from home.

© 2004 Open Mobile Alliance Ltd. All Rights Reserved.
Used with the permission of the Open Mobile Alliance Ltd. under the terms as stated in this document.

2. The user needs to check the activation status of his security systems at his home.
3. The user connects to his home security systems using mobile handset and retrieves the current status of the system.
4. The user notices that security system was not activated for all zones in the house.
5. The user reconfigures the security system and activates for all zones. The user has option to bypass certain zones.

5.5.1.8 Alternate Action Flow

None.

5.5.1.9 Operational and Quality of Experience Requirements

It must be easy and seamless for the user to download, store and execute applications on the handset.

5.5.2 Use Case, <TPSP, P2P, A&E, OTHER > Remote Instant Security Alert Over Mobile

5.5.2.1 Short Description

A user is able to receive the alert from his security systems at his home and check the status through various subsystems such as monitoring cameras.

5.5.2.2 Actors

A user, a mobile handset, home security systems, home gateway server

5.5.2.3 Actor Specific Issues

The user can initiate actions at any time without any knowledge of home device.

5.5.2.4 Actor Specific Benefits

The user can initiate action without knowing the state of home device.

5.5.2.5 Pre-conditions

The user has necessary access permissions to transfer information to his home network components.

5.5.2.6 Post-conditions

The user would have taken necessary action to deal with medical emergency.

5.5.2.7 Normal Action Flow

1. The user is at a remote location away from home.

© 2004 Open Mobile Alliance Ltd. All Rights Reserved.
Used with the permission of the Open Mobile Alliance Ltd. under the terms as stated in this document.

2. The user receives an alert from his home security systems over his mobile handset.
3. The user connects to his home security systems using mobile handset and retrieves the current status of the system.
4. The user elects to view streaming video from his back door camera, front door camera, and foyer camera, and sees a postman standing by the main door.
5. The user resets his the security system and clears the alert state using his mobile handset.

5.5.2.8 Alternate Action Flow

None

5.5.2.9 Operational and Quality of Experience Requirements

It must be easy and seamless for the user to download, store and execute applications on the handset.

5.6 Open Issues

<< Anything that the author(s) want to mention and which needs further clarification. (optional). DELETE THIS COMMENT >>

We need to analyze the security requirements in more details.

We need to further analyze possible alternate flows in some use cases.

© 2004 Open Mobile Alliance Ltd. All Rights Reserved.
Used with the permission of the Open Mobile Alliance Ltd. under the terms as stated in this document.

6. Requirements (Normative)

<Linkage of requirements to Use Cases is not mandatory>

6.1 High-Level Functional Requirements

The mobile home interaction system SHALL cover the following requirements:

Req 1	A mobile device user SHOULD BE able to initiate communication with devices in his home network at any time without requiring network operator to set up any special communication session to enable such communication.
Req 2	A mobile device user MUST NOT be required to disclose the purpose of his interaction with his home network devices to a network service provider.
Req 3	A mobile device user SHOULD BE able to initiate and terminate his communication session with the devices in his home at any time without affecting other network services being concurrently used by the device. For example, a video streaming session between mobile and a home recorder should not affect the ability of a user to stream video from other sources.
Req 4	A mobile device user MUST be able to check status of his home networking devices at any time, and re-iteratively as necessitated by the needs of the user.
Req 5	The system MUST be designed to enable bi-directional session initiation and data transfer ability. It means that the communication session for a mobile to a device on consumer network may be initiated either by a mobile user or by a home device.
Req 6	A mobile device user MUST be able to get asynchronous events generated by his home networking devices as often as needed subject to certain pre-configured criteria for event generation.
Req 7	A mobile device user or the service provider MAY enable suitable event filtering or throttling mechanism to minimize network traffic.
Req 8	The system MUST be designed for high performance operation minimizing transactional delays, and optimising network throughput.
Req 9	The system MUST mask the low layer communication protocols from the user so that a user or an mobile to home interaction application is not dependent on any particular type of wireless acsess technology being used by a service provider network.

© 2004 Open Mobile Alliance Ltd. All Rights Reserved.
Used with the permission of the Open Mobile Alliance Ltd. under the terms as stated in this document.

Table 1: High-Level Functional Requirements

6.1.1 Security

The interaction between mobile device and home network with should be secure in general sense as to give enough confidence to a mobile user to use the services. (authentication, non-repudiation, replay, denial of service attack, encryption).

Req 1	The communication between a mobile device user, and consumer network MUST be secure, and based on standard secure communication protocols approved or developed by OMA.
Req 2	The communication between a mobile device user and a device on the consumer network SHOULD BE based on two-way authentication between two communicating entities.
Req 3	The communication between a mobile and his home network MUST BE protected from the denial of service attacks. This protection can be provided either by security mechanisms built in the communication protocol, or by external security mechanisms added to network services by the network service provider.
Req 4	A mobile device user SHOULD be able to use different level of security depending upon the needs of applications. The only requirement is that the security mechanism be approved and developed in OMA.
Req 5	A network service provider MUST NOT require a mobile device user to disclose purpose of his interaction with a device on his home network.
Req 6	For operations that may impact integrity of a mobile device, such as OTA programming, configuration download etc., appropriate security mechanisms approved by OMA SHALL be applied.

Table 2: High-Level Functional Requirements – Security Items

6.1.2 Charging

The requirements for charging are detailed below:

Req 1	A network service provider MUST NOT keep any data about a mobile user's application except those that are essential for it to generate billing record for the network service utilization. For example, a network service provider must not keep a copy of personal video streamed from the mobile by a user to his home recorder. This requirement is closely

© 2004 Open Mobile Alliance Ltd. All Rights Reserved.
Used with the permission of the Open Mobile Alliance Ltd. under the terms as stated in this document.

	related to issue of the user privacy.
Req 2	A network service provider, at its option, MAY bundle the charges for additional network services to enable mobile-consumer interaction with other services provided to the same mobile user. Therefore, it SHALL NOT be mandatory to collect separate billing records for such services.
Req 2	A network service provider MAY charge additional service charges if the interaction betweem a mobile and a device on a consumer network is provided through an intermediate server maintained by it. In this case, a service provider MAY collect necessary network service utilization data about any mobile initiated or mobile device terminated sessions.

Table 3: High-Level Functional Requirements – Charging Items

6.1.3 Administration and Configuration

The mobile device to consumer networking interaction may require configuration at three key points: configuration in the operator network, configuration at a device or configuration at the boundary between provider and home network. Requirements for administration, and configuration are given below.

Req 1	A mobile device agent software, resident on the mobile device, MUST support standard configuration and provisioning protocols.
Req 2	The mobile device to consumer networking interaction protocols MUST minimize amount of configuration data needed at the mobile device.
Req 3	The support for Audit capabilities MUST be provided so that traceback and fault control can be provided.

Table 4: High-Level Functional Requirements – Administration and Configuration Items

6.1.4 Usability

Req 1	A mobile device user MUST NOT be required to understand the details of implementation to utilize an application that depends on the interaction between a mobile device and a device in the home network. There should be no assumption about a user having any special knowledge about the network to benefit from the service.
Req 2	A mobile device used for interacting with a device in the home network MAY require a special purpose client software on the device to enable this interaction between devices and the home network.

© 2004 Open Mobile Alliance Ltd. All Rights Reserved.
Used with the permission of the Open Mobile Alliance Ltd. under the terms as stated in this document.

Req 3	A mobile device MAY require software download from the service provider that enables either the configuration of the device, or loads any application software component used for enabling a mobile to home network transaction or data transfer application.

Table 5: High-Level Functional Requirements – Usability Items

6.1.5 Interoperability

Req 1	The interaction between a mobile device and a device on a consumer's home network MUST be based on protocols either adapted by another standard's body such as IETF, or developed and approved within OMA.
Req 2	The mobile to consumer networking interaction MUST NOT specify any application level user interface.

Table 6: High-Level Functional Requirements – Interoperability Items

6.1.6 Privacy

Req 1	A mobile device user SHOULD NOT be required to disclose the nature of his interaction between his mobile device and a device on the home network.
Req 2	The solution MUST ensure high level of user and data privacy ensuring that only authorized user or applications can have access to any confidential transaction data.

Table 7: High-Level Functional Requirements – Privacy Items

6.2 Overall System Requirements

Req 1	There SHOULD NOT be any assumption about the implementation technology for the mobile to consumer networking use cases.

Table 8: High-Level Functional Requirements – Security Items

© 2004 Open Mobile Alliance Ltd. All Rights Reserved.
Used with the permission of the Open Mobile Alliance Ltd. under the terms as stated in this document.

6.3 System Elements

System Element	System Element Description	Reference
A: Mobile Device Agent	This is the application software resident on the mobile devices. This agent is responsible for initiating or terminating any interaction between a mobile device and a device in a user's home network.	Sec 4.0
B. Mobile Home Agent	This mobile application agent will be resident on a mobile home server, or any other network node that can abstract the similar functionality and has capability to present as such to a mobile device. This agent may be resident on a server in the user's the home network, at a server at the boundary between a user's home network and the service provider network, or on a server in the service provider network.	

Table 9: System Elements

The system has the following elements:

1. Mobile Device Agent
2. Mobile Home Agent

6.3.1 Mobile Device Agent

Req 1	Mobile Device Agent MUST support the ability to communicate with the mobile home agent.
Req 2	Mobile Device Agent MUST have the ability to receive asynchronous events from the mobile home agent.
Req 3	Mobile Device Agent MUST have the ability to send asynchronous events to the mobile home agent.
Req 4	Mobile Device Agent SHOULD have the ability to securely measure the time since the application was activated first time.

© 2004 Open Mobile Alliance Ltd. All Rights Reserved.
Used with the permission of the Open Mobile Alliance Ltd. under the terms as stated in this document.

Req 5	Mobile Device Agent SHOULD have the ability to securely count the number of times an application has been activated.
Req 6	Mobile Device Agent SHOULD have the ability to initiate and/or terminate data transfer sessions to the mobile home agent.

Table 10: Requirements for Mobile Device Agent

6.3.1.1 Interfaces to Mobile Home Agent

The interface from the mobile device agent to the mobile home agent includes:

- The ability to acknowledge to the mobile home agent, that the information transfer went well, so that the next transaction can be initiated.
- The ability to ask the mobile home agent for the status of all connected devices, and enquire about various services available on these devices.
- The ability to send an asynchronous event to the mobile home agent regarding any state at the mobile device.
- The ability to receive asynchronous events from the mobile home agent and present it to the user.
- The ability to receive asynchronous notifications from the mobile home agent regarding change in any device configurations.
- The ability to specify suitable filtering criteria to mobile home agent to only send certain events and from certain selected devices.
- The ability to initiate and terminate any data transfer sessions with the mobile home agent.

6.3.2 Mobile Home Agent

Req 1	Mobile Home Agent MUST support the ability to communicate with the mobile device agent.
Req 2	Mobile Home Agent MUST have the ability to send asynchronous events from the mobile device agent.
Req 3	Mobile Home Agent MUST have the ability to receive asynchronous events from the mobile device agent.
Req 4	Mobile Home Agent SHOULD have the ability to securely measure the time since the application was activated first time.

© 2004 Open Mobile Alliance Ltd. All Rights Reserved.
Used with the permission of the Open Mobile Alliance Ltd. under the terms as stated in this document.

Req 5	Mobile Home Agent SHOULD have the ability to securely count the number of times an application has been activated.
Req 6	Mobile Home Agent SHOULD have the ability to initiate and/or terminate data transfer sessions to the mobile device agent.

Table 12: Requirements for Mobile Home Agent

6.3.2.1 Interfaces to Mobile Device Agent

The interface from the mobile home agent to the mobile device agent includes:

- The ability to acknowledge to the mobile device agent, that the information transfer went well, so that the next transaction can be initiated.
- The ability to ask the mobile device agent for the status of all connected devices, and enquire about various services available on these devices.
- The ability to send an asynchronous event to the mobile device agent regarding any state at the mobile device.
- The ability to receive asynchronous events from the mobile device agent and present it to the user or a device in the home.
- The ability to receive asynchronous notifications from the mobile device agent regarding change in any device configurations.
- The ability to specify suitable filtering criteria to mobile device agent to only send certain events and from certain selected devices.
- The ability to initiate and terminate any data transfer sessions with the mobile device agent.

6.3.3 Network interfaces

1	<Ref: SEC 4>	The protocol between the mobile device agent and the mobile home agent, can for example be based on HTTP, TCP or UDP or any other well known protocol.
2	<Ref: SEC 4>	The protocol should be optimised in terms of size and performance.

Table 13: Requirements for Network Interfaces

© 2004 Open Mobile Alliance Ltd. All Rights Reserved.
Used with the permission of the Open Mobile Alliance Ltd. under the terms as stated in this document.

Appendix A. Change History C (Informative)

<< The following is a model of a revision table. DELETE THIS COMMENT >>

A.1 Approved Version History

Reference	Date	Description
n/a	n/a	No prior version –or- No previous version within OMA

A.2 Draft/Candidate Version <current version> History

Document Identifier	Date	Sections	Description
Draft Versions OMA-RD_Developer_Requirements_Mobile_Consumer_Networking_Applications-V1_0_1-20040621-D	21 Jun 2004		Initial document to address the basic starting point. Based on previously submitted use cases lin DIG working group.
Draft Versions OMA-RD_Developer_Requirements_Mobile_Consumer_Networking_Applications-V1_0_3-20040812-D	12 August 2004		Incorporated a number of changes received during presentation at OMA Bangkok: • Added many new requirements, • Standardized on mobile device agent and mobile home agent • Added a number of new clarifications to many requirements previously included • Better classification of requirements in line with OMA Requirement Group's recommendations.
Draft Version OMA-xxyyz-V1_2			

© 2004 Open Mobile Alliance Ltd. All Rights Reserved.
Used with the permission of the Open Mobile Alliance Ltd. under the terms as stated in this document.

Appendix B. <Additional Information>

If needed, add annex to provide additional information to support the document. In general, this information should be informative, as normative material should be contained in the primary body of the document.

Note that the styles for the headers in the appendix (App1, App2, App3) are different than the main body. The use below is intended to validate the styles to be used. Remove if not needed.

DELETE THIS COMMENT

B.1 App Headers

<More text>

B.1.1 More Headers

© 2004 Open Mobile Alliance Ltd. All Rights Reserved.
Used with the permission of the Open Mobile Alliance Ltd. under the terms as stated in this document.