Initial Draft Recommendation Y.cmr

Deployment models for Customized Multimedia Ring Service

Summary

Customized Multimedia Ring (CMR) service is a set of services including Customized Ring Back Tone (CRBT) service, Customized Ringing Tone (CRT) service, and Customized Background Tone (CBT) service. The CMR service enables network to delivery multimedia ring tone, ring back tone or background tone to calling and/or called parties. Instead of existing legacy ring, multimedia ring can be a music, voice, video, text, image or arbitrary combination of multiple media which is customized by users.

When CMR service is provided by using an IMS-based service environment, recommendation Y.2211 gives CMR service description and defines some of the service features. CMR service can be provide in not only IMS-based service environment, but Call Server (CS) based service environment as well. The service feature and service scenarios from user point are similar in the two kinds of service environments, although the media capability of legacy terminals is limited.

This draft Recommendation describes the CMR service use cases, CMR service network deployment models over NGN which includes CS based and IMS based service environment, and service deployment management. Network deployment includes the aspects regarding the involved functional entities, service trigger mode and the way of media delivery.

Keywords

IMS, Call Server, use case, deployment model

TSB Note: All rights reserved. No part of this publication may be reproduced, by any means whatsoever, without the prior written permission of ITU.

Contents

Page

1 Scope 4

2 References 4

3 Definitions 4

4 Abbreviations 4

5 Conventions 5

6 General description 5
6.1 Customized Multimedia Ring (CMR) Service 5
6.2 Customized Ring Back Tone (CRBT) service 5
6.3 Customized Ringing Tone (CRT) service 6
6.4 Customized Background Tone (CBT) service 6

7 Use cases 6
7.1. Service management 6
7.2. Customized Multimedia Ring contents management 7
7.3. Customized Multimedia Ring playing rules 8
7.4. Ring Tone Filtering 9

8 Network Deployment Models 9
8.1 General Description 9
8.2 Deployment models for call server based environment 10
8.3 Deployment models for IMS based environment 11
8.3.1 IMS based CRBT service deployment model 13
8.3.2 IMS based CRT service deployment model MR-FE involved 14
8.3.3 IMS based CRT service deployment model IRT Server involved 15
8.4 Converged deployment model 16
8.4.1 Convergence for PSTN and Call server based environment 17
8.4.1.1 CRBT service deployment model reusing IN IP and SCP 17
8.4.1.2 CRBT service deployment model reusing IN IP, SSP and SCP 19
8.4.1.3 CRBT service deployment model using AS and MRP 20
8.4.2 Convergence for IMS based and Call server based environment 22
8.4.3 Converged deployment model utilizing existing services 23

9. Interworking 25

10 Service deployment management 25
10.1 CMR service call control 25
10.2 Content storage and management 25

10.3 User profile storage and management 26
10.4 Service provision 26
10.5 Operation and maintenance 27
10.6 Charging 27
10.7 Overall logic functional entities 27

11 Qos consideration 28

12 Security aspects 28

13 Charging aspects 29

Annex 1 – Examples for Use Case 30
1.1 CRBT service 30
1.1.1 Default ring set by operator 30
1.1.2 Default ring set by subscriber 30
1.1.3 Distinctive ring for calling party 30
1.1.4 Random/sequential playback 31
1.1.5 Ring Present 31
1.1.6 Ring Duplication 31
1.1.7 Intro ring 32
1.1.8 Ring Back Tone Filtering 32
1.1.9 CRBT continue with CBT 33
1.2 CRT service 33
1.2.1 Playing ring tone 33
1.2.2 Ring Tone Filtering 33
1.2.3 CRT continue with CBT 34
1.3 Interaction 34

Initial Draft Recommendation Y.cmr

Deployment models for Customized Multimedia Ring Service

1 Scope

Customized Multimedia Ring service includes Customized Ring Back Tone (CRBT) service, Customized Ringing Tone (CRT) service and Customized Background Tone (CBT) service.

This draft Recommendation is to study the detailed use cases of CMR service, and the deployment models including service network deployment and service deployment management.

2 References

The following ITU-T Recommendations and other references contain provisions, which, through reference in this text, constitute provisions of this draft. At the time of publication, the editions indicated were valid. All Recommendations and other references are subject to revision; all users of this draft are therefore encouraged to investigate the possibility of applying the most recent edition of the Recommendations and other references listed below. A list of the currently valid ITU-T Recommendations is regularly published.

[1] ITU-T Recommendation Y.2001, General overview of NGN

[2] ITU-T Recommendation Y.2201, NGN release 1 requirements

[3] ITU-T Recommendation Y.2012, Functional Requirements and Architecture of the NGN

[4] ITU-T Recommendation Y.2021, IMS for Next Generation Network

[5] ITU-T Recommendation Y. 2031, PSTN/ISDN Emulation Architecture

[6] ITU-T Recommendation Y. 2271, Call Server based PSTN/ISDN Emulation

[7] ITU-T Recommendation Y.2211, IMS based Real-time Conversational Multimedia Service over NGN

[8]

3 Definitions

This Document uses or defines the following terms:

[TBD]

4 Abbreviations

This Document uses the following abbreviations.

AG	Access Gateway
AS	Application Server
CFB	Communication Forwarding on Busy
CFNR	Communication Forwarding on No Replay
CFU	Communication Forwarding Unconditional
CMR	Customized Multimedia Ring
CRBT	Customized Ring Back Tone
CRT	Customized Ring Tone

CS	Call Server
IMS	IP Multimedia Subsystem
IN	Intelligent Network
INAP	Intelligent Network Application Part
IP	Internet Protocol
ISDN	Integrated Service Digital Network
IVR	Interactive Voice Response
LE	Local Exchange
MS	Media Server
NGN	Next Generation Network
OIR	Originating Identification Restriction
PSTN	Public Switching Telephone Network
QoS	Quality of Service
SCP	Service Control Point
SG	Signalling Gateway
SIP	Session Initiation Protocol
SSF	Service Switching Function
SSP	Service Switching Point
STP	Signalling Transfer Point
TE	Transit Exchange
TMG	Trunking Media Gateway

5 Conventions

None.

6 General description

6.1 Customized Multimedia Ring (CMR) Service

Customized Multimedia Ring service is a combination service that allows subscribers to customize medium used to present to the called party or calling party based on the service information, and it includes Customized Ring Back Tone service, Customized Ring Tone service and Customized Background Tone service. The medium includes audio, text, video, image, etc. which is customized by subscribers.

6.2 Customized Ring Back Tone (CRBT) service

Customized Ring Back Tone service is to play customized ring back tone to calling party instead of traditional ring back tone during call setting-up process according to call information and subscriber’s preference. The service is triggered based on the subscription of called party or calling

party and mostly based on the subscription of called party. Customized ring back tone can be an image, audio, video or composition of them which are pre-configured by subscriber.

Customized ring back tone contents are provided by content provider or operator. A CRBT service subscriber has an own depository provided by operator or provider, in which ring back tone contents customized by subscriber and certain rules set by subscriber can be stored and retrieved.

There shall be multiple ways for subscriber to customize ring back tone, such as by sending short message, through Web site, or via IVR operation, etc.

6.3 Customized Ringing Tone (CRT) service

Customized Ring Tone service is to play customized ring tone to called party during call setting-up process according to call information and subscriber's preference. The service is triggered based on the subscription of calling party or called party and mostly based on the subscription of calling party. Customized ring tone can be an image, audio, video or composition of them which are pre-configured by subscriber.

The disposition of customized ring tone contents and subscriber's information, and the ways for subscribers to customize ring tone in CRT service are the same as CRBT service.

6.4 Customized Background Tone (CBT) service

Customized Background Tone service is a service that allows the subscriber to customize background medium. The medium includes audio, text, video, image, etc. The network will set up a triple communication among the called party, the calling party and the CBT server when triggered, and play the background medium to present to both the called party and the calling party during a communication. The CBT service can be triggered based on the calling or called party's subscription information.

7 Use cases

Some typical use cases are described below, and they are applicable to each service in CMR service except special explanation. Also, the word 'ring' represents both ring back tone in CRBT service and ring tone in CRT service.

7.1. Service management

- Subscription for CMR service

The user can subscribe or de-subscribe the CMR service.

- Default ring tone set by operator

After the user subscribes the CMR service, the system can automatically set a default ring tone instead of the common ring back tone or common ring tone. The system will play the default ring back tone to the calling party in the CRBT service or play the default ring tone to the called party in the CRT service before the user deploys any other ring tone and playing rule.

- Service activiation/de-activiation

The users can activiate/de-activiate the CMR service on his own after subscribing whenever he/she wants. For example, when the subscriber has deactivated the CRBT service, the service will keep the subscriber data but will stop playing the ring back tone to the users calling him/her. He/she will be able to enter the voice management flow or web interface to activate the service again but cannot edit/modify/query the service information. And after the subscriber activates the CRBT service

again later, the service will restore the subscriber data and the subscriber can normally use the CRBT service again.

The service can be activated/de-activated by a subscriber through the voice management flow or the web based service management interface and etc. After a subscriber subscribes to the service and an account is created, the service is activated by default. The monthly rental CDR will be generated for the subscriber after he/she deactivates the service.

7.2. Customized Multimedia Ring contents management

Customized Multimedia Ring contents management supports CMR users to manage their own ring tone library and music box and browse the multimedia ring contents and music box provided by the contents provider. It can also provide the capabilities of ordering, uploading, presenting and duplicating the multimedia ring contents and music box.

- Music box

Music box is actually a ring tone package (collection of ring tones/ring back tone). Each user can own one or more music boxes. A user can create, delete and modify his music boxes, and configure the play sequence of ring tones in this music box, and the purchase music box which contains ring tone files of specific type from the service provider or 3rd party content provider as well.

Rather than the single multimedia ring tone/ring back tone, the ring tone in the music box can be played randomly or circularly in every establishment of call.

- Personal multimedia ring tone library

The CMR subscriber can own a personal library which stores his/her single multimedia ring tones and music boxes. The user must select the ring content in his/her own library when deploying the ring playing rule.

- Browsing and ordering the multimedia ring tones

A user can browse, search, try and order the multimedia ring tone/ring back tone through the portal content provider, e.g. the website. The selected ring tone/ring back tone will be stored in the user's own library.

- Uploading the personal multimedia ring tones

A user can create multimedia ring tone files and upload them to his own library. The uploaded ring tone files must comply with the content provider's requirements for format, content and copyright of ring back tone files or ring tone files.

- Presentation

A user can present the multimedia ring back tones or ring tones to other users, and the presented ring back tones or ring tone will be stored in an accepted party's library.

- Duplication of the ring tone

A user can duplicate the multimedia ring back tones or ring tones selected by other users. When User A calls User B and hears User B's multimedia ring back tone or when User A is called by User B and hears User B's multimedia ring tone, User A can duplicate the multimedia ring back tone or ring tone of User B by pressing the key at the terminal when experiencing the ring tone of User B in the alerting phase.

- Intro ring

Intro ring back tone is a special ring tone to be played for several seconds before normal ring tone. If intro ring tone exists, the calling party will hear at least two sections of ring tone: the first section is the intro ring tone and from the second section the normal ring tone is played continuously.

Intro ring tone has the same characteristic as the normal ring tone. They can record voice or video. And, they also can make announcement file with a TTS (Text To Speech) engine or they can choose intro CRBT or CRT file on a contents list on a web site or by phone. Subscribers can turn on/off the intro CRBT function also.

7.3. Customized Multimedia Ring playing rules

CMR service allows users to customize the playing rules of multimedia ring tone.

- Customizing the ring tone for a specific subscriber

The CMR users can set different multimedia ring tones for different subscribers. This multimedia ring tone can be either the single ring tone or the ring tone in music box.

- Customizing the ring tone for a specific identity group

The calling party identity group is established for the CRBT service. The identity can be Tel URL or SIP URL. The CMR users can group the identity by friends, relatives, townsmen, and colleagues, etc.

In the same way, a called party identity group is established for the CRT service. The identity can be Tel URL or SIP URL. The CMR users can group the identity by friends, relatives, townsmen, and colleagues, etc.

The CMR users can set up different multimedia ring tones for different identity groups. This multimedia ring tone can be either the single ring tone or the ring tone in the music box.

The subscriber can manage his/her personal number groups via the website or through the voice management flow, such as adding/modifying/deleting a number group, setting the ring tone for a specific number group, and adding/removing members to/from a number group.

- Customizing the ring tone for specific time segments

The ring bank tones and ring tones can be customized by time and date, and different multimedia ring back tones and ring tones or music box can be played in different time segments. The playback time can be several fixed time segments every day, or some special days or some days every week/every month/every year.

- Customizing the ring tone for a user’s status quo

The ring tone can be customized for a user’s status quo (can be shown in presence service of the user), such as free, busy, etc. For the CRBT service, different multimedia ring back tones can be played for the called party in different status quo. For the CRT service, different multimedia ring tones can be played for the calling party in different status quo. This multimedia ring tone can be either the single ring tone or the ring tone in the music box.

- Customizing ring tone to satisfy the combined requirements of identity group, time and user’s status quo

Two or three of the above ring play rules can be used in combination.

- Background Tone Adjust

The CBT subscriber can adjust the background tone during the communication, including inserting background tone, changing the background tone, adjusting the volume, etc. The CBT server can

play the related background tone or adjust the volume according the key-press information from called party or calling party.

7.4. Ring Tone Filtering

The users can set ring filters to control and limit the CMR presented to them so that the presented party can enjoy or reject the ring tone pre-configured by calling/called party user according to presented party user's filters. For example, for CRBT service, the users can set a filter to filter some specific calling party's customized ring back tones which he/she doesn't want to experience (not presented to the called party).

The ring tone filter can be customized for a specific identity group and also can be customized for specific time segments.

If the user set a filter for a specific identity group, the customized multimedia ring tones of calling/called party whose identity is in the specific identity group will not be played to the filer user, instead by the normal ring back tone/ring tone.

If the user set a filter for a specific time segment, the multimedia ring tones will not play to the filer user in such specific time segment, instead by the normal ring back tone/ring tone.

8 Network Deployment Models

8.1 General Description

Multimedia Ring is one of the key service features of CMR services. The content of multimedia ring is a very important part for CMR service deployment. The rich content can bring up favourable service operating and it is an advantage to get more content with copyright from the greatest possible number of SP/CP. The CMR service is not a service that can be solely carried out by a single party but depends on the operator, content providers, equipment vendors, and other related enterprises for its successful deployment.

The figure 1 below depicts service value chain in CMR service deployment, and it is just for information.

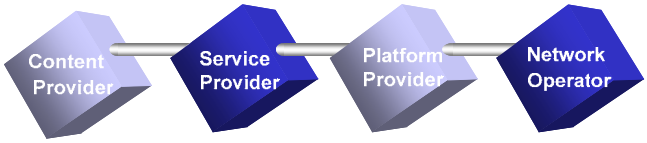

Figure 1 value chain in CMR service deployment

In figure 1, network operator is who provides network to support CMR service, make service strategy, and is responsible for integrated service; Platform provider is a strategic partners of network operator to offer the CMR service, and responsible for providing service platform, technical support and maintenance; SP is who provides processed contents and promotes own contents, and joints marketing with operator for CMR service promotion; CP is who provides media with copyrights. How SP/CP is involved in the CMR service value chain is out of the scope of this study. Network deployment and service platform aspects will be described.

Currently, CRBT service has already been deployed for legacy terminal in narrow band network, such as PSTN. Along with the evolution to next generation network, including Call Server based network and IMS/NGN network, it shall be considered first to provide CRBT service continually to legacy terminal under the new circumstances. Call Server based emulation environment is already described in Y.PIEA, in this environment providing audio media content of CRBT service will be described. Moreover, new features and capabilities are needed to be provided to the NGN terminals

in IMS/NGN network, such as multimedia ring tone content. Providing multimedia ring tone content in CMR service in IMS based environment will be described. Furthermore, in course of network evolution co-existence of different networks is not avoidable. For the aim of smooth evolution and protecting investment of operators, it is necessary to provide convergence CMR service for both legacy terminal and NGN terminal in convergence network environment.

8.2 Deployment models for call server based environment

Call Server based network, as one of the solutions for PSTN/ISDN Emulation, provides services for legacy terminal connected via access gateways to the NGN. In the Call Server-based environment, as new services are provided in application layer CRBT service deployed to legacy terminal can be easily succeeded in this environment.

Figure 2 depicts a CRBT service deployment model in Call Server based environment.

In this model, Call Server, in conjunction with AS-FE and MRP-FE, provides CRBT service to legacy terminal connected via access gateway. The AS-FE allocates MRP-FE resources to play ring back tone to subscribers.

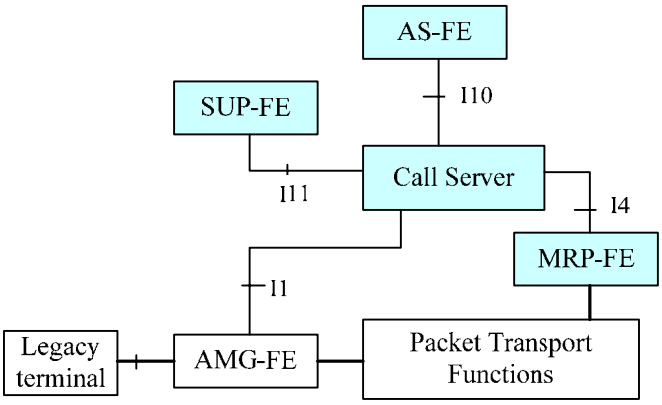

Figure 2 CRBT deployment model in CS based environment

Media capability of legacy terminal is limited, therefore only audio is supported in this model.

MRP-FE is in charge of media file storage. In this model, media file will be converted to audio stream, and then passed to calling party through network.
The storage of user attribute data or subscription information is deposited in Call Server or in SUP-FE.

CRBT service can be triggered by Call Server in two ways. One way is according to the called number analysis; the other is according to the attribute data of the called party stored in the user profile. And service trigger occurs in the home network of the called party.

It is assumed that user B is a CRBT service user and the Call Server has gotten the related subscriber data from SUP-FE. When Call Server receives a call to user B, it firstly alters the user's terminal. After ringing of terminal, Call Server informs AS-FE requesting CRBT service, and then AS-FE controls MRP-FE to play ring back tone. When user B answers or ends the call, call server informs AS to stop CRBT and connect calling party User A and user B.

Figure 3 shows the generic information flow. AG is figured with User A for simplification.

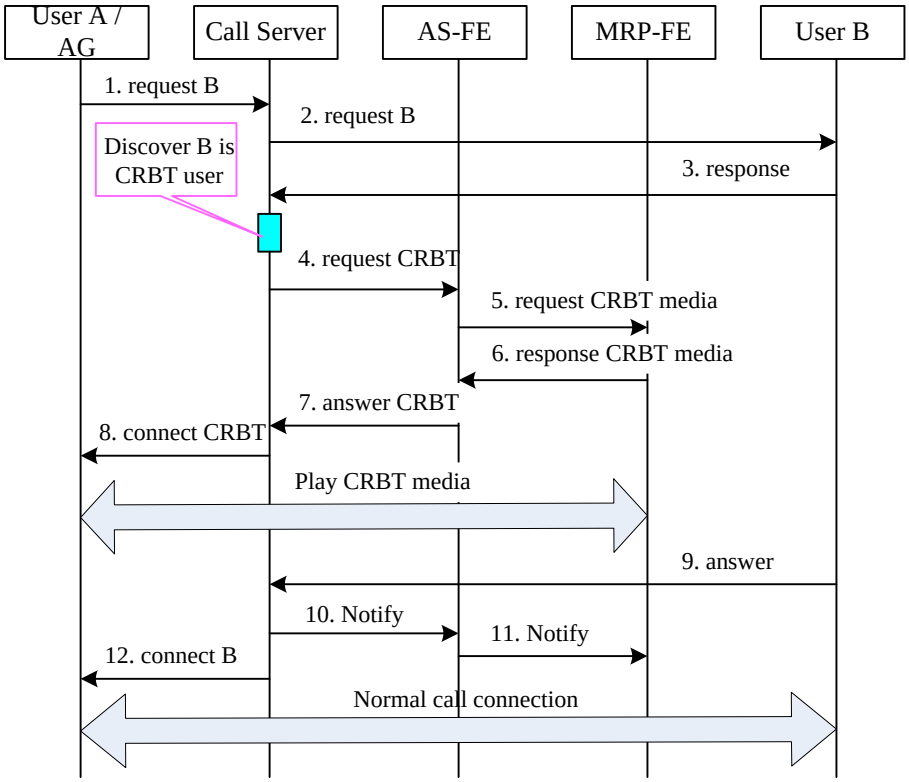

Figure 3

1, User A initiates a call to User B, the call arrives at Call Server User B belongs to.

2, Call Server connects User B.

3, User B terminal is ringing, and returns a response to Call Server.

4, Call Server triggers CRBT service to AS-FE based on user attributes stored in it.

5, AS-FE requests for CRBT media to MRP-FE according to service logic and call information.

6, MRP-FE returns response with CRBT media session.

7, AS-FE transfers response to Call Server.

8, Call Server instructs User A terminal to connect MRP-FE through media stream, then User A can enjoy the ring back tone pre-configured by User B.

9, User B answers the call.

10, Call Server receives answer message and informs AS-FE to stop the ring back tone.

11, AS-FE instructs MRP-FE stop playing ring back tone.

12, Call Server instructs User A terminal to connect User B terminal through media stream. A normal call connection is established.

8.3 Deployment models for IMS based environment

IMS service environment in NGN release1 is required to provide a category of real-time conversational multimedia services, which include PSTN/ISDN simulation services. Naturally, CMR service is firstly considered to be implemented in IMS environment. This clause describes the deployment of CMR service in IMS based service environment.

Figure 4 shows a deployment model for CMR service. It is assumed that originating terminal and terminating terminal belong to same IMS network for simplification.

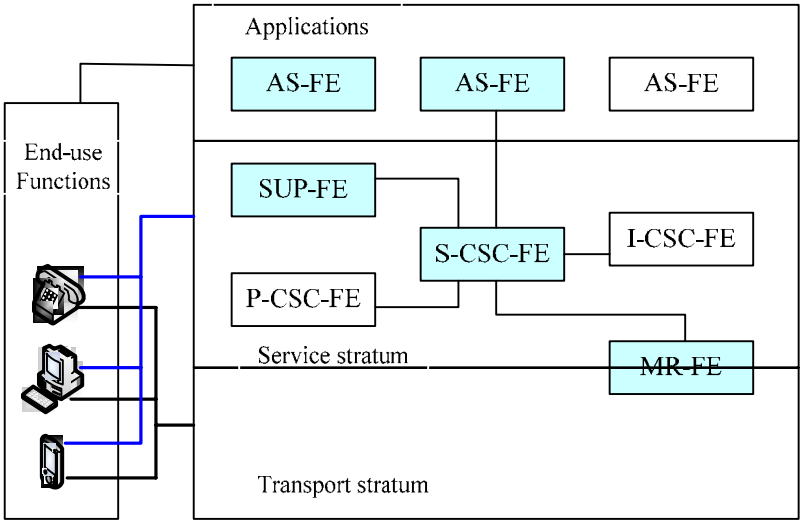

Figure 4 CMR service deployment model in IMS

In IMS environment, the following functional entities are involved to implement the CMR service.

- Serving Call Session Control Functional Entity (S-CSC-FE)

The Serving Call Session Control Functional Entity (S-CSC-FE) handles functionality related to session control and routing of session messages [3]. The S-CSC-FE establishes, monitors, supports and releases multimedia sessions and manages the user's service interactions. The S-CSC-FE interacts with the AS-FE to support CMR service.

- Service User Profile Functional Entity (SUP-FE)

The Service User Profile Functional Entity (SUP-FE) is responsible for storing user profiles, subscriber-related location data, and presence status data in the Service stratum [3].

- Application Server (AS-FE)

The Application Server (AS) i.e., SIP Application Server, OSA Application Server, or CAMEL IM-SSF, offers value added IM services and resides either in the user's home network or in a third party location. AS is a core component to implement CMR service logic. It responds CMR service request; inquiries customized multimedia based on certain call information and service strategy, and controls media negotiation.

- Media Resource Functional Entity (MR-FE)

Media Resource Functional Entity (MR-FE) includes MRC-FE and MRP-FE defined in Y.2012[3]. The MR-FE provides a set of resources within the core network for supporting services. In CMR service, MR-FE stores audio/video media, interacts with AS-FE and provides terminal users audio/video information.

Considering different media content type and different capability of UE, media playing modes shall be applied to adapt these different environments. In general, media type can be divided into two species: continues media and discrete media. Continues media, such as audio, video and any composition of them, is not fit for being downloaded. This kind of media is converted to real-time stream and passed to the user by network. Different kind of media negotiation mechanisms will occur before media transferring according to the capability of UE. For discrete media such as picture and text can be downloaded for playing. These media files are downloaded to local terminal for user’s browsing. According to service strategy, the downloaded files can be preserved in local or be deleted after playing.

According to different media playing mode, the different requirements for user terminal should be supported. For media negotiation way, whether and how the terminal supports early media shall be exposed to AS for determining which playing mode will be applied. For the download way, the terminal should support downloading file.

AS-FE should support all above playing modes. Once the CMR service is triggered, CMR server shall choose the certain playing mode as per terminal capability and service policy.

CMR service trigger complies with IMS trigger rules. Trigger point is different according to different service subscription side. On the situation of calling side subscription, service is triggered in calling party home network when calling party initiates a CMR call. On the situation of called side subscription, service is triggered in called party home network when the CMR call arrives at home S-CSC-FE. CMR service logic fulfills connecting called party and providing multimedia ring function.

In the following subsections, scenarios are given to describe service flow.

8.3.1 IMS based CRBT service deployment model

In this scenario the MR-FE is involved to provide ringing tone content via RTP or RTSP. It is assumed that user B is a CRBT service subscriber and has chosen a specific music for calling user A. The specific multimedia is provided by the operator and stored at MR-FE. The generic procedures of CRBT service are as following. Some flows are ignored for convenience.

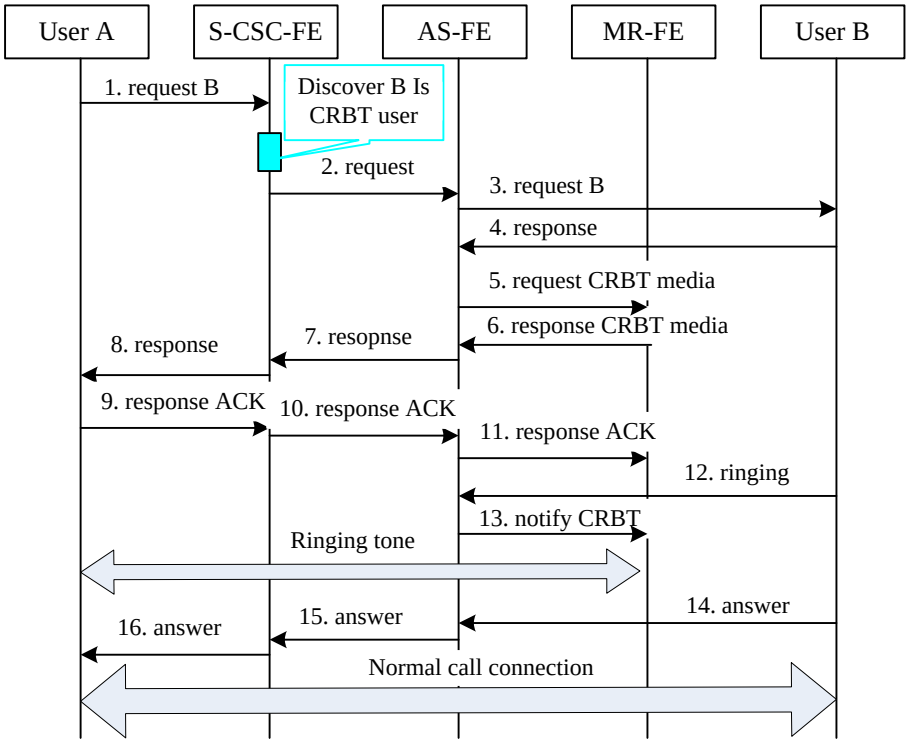

Figure 5

1, User A initiates a call to User B. Call message includes terminal media capabilities and the capability indicating User A supports early-session.

2, the call arrives at S-CSC-FE. S-CSC-FE triggers CRBT service to AS-FE according to iFC.

3, AS-FE determines that User A supports early-session according to the call message and sends a request to User B via IMS network and indicates supporting early media session.

4, User B returns a response, including answer to User A terminal media capabilities.

5, AS-FE sends a request for CRBT media to MR-FE.

6, MR-FE returns CRBT media session description to AS-FE.

7, AS-FE returns a response to S-CSC-FE with CRBT early media session description and User B terminal media answer.

8, S-CSC-FE transfers response to User A terminal.

9, User A terminal returns ACK answering early media session description included in above response.

10, 11, S-CSC-FE transfers ACK to AS-FE, then AS-FE transfer it to MR-FE.

12, User B terminal is ringing, and sends ringing message to AS-FE.

13, AS-FE sends a notification to MR-FE, instructing MR-FE playing ring back tone to User A terminal. User A can enjoy the media pre-configured by User B.

14, 15, 16, When User B answers, call message is transferred to User A terminal, then normal call connection between User A and User B is established.

8.3.2 IMS based CRT service deployment model MR-FE involved

In this scenario the MR-FE is involved to provide ringing tone content via RTP or RTSP. We assume that user A is a CRT service subscriber and has chosen a specific music for calling user B. The specific music is provided by the operator and stored at MR-FE. The generic procedures of CRT service are as following. Some flows are ignored for simplification.

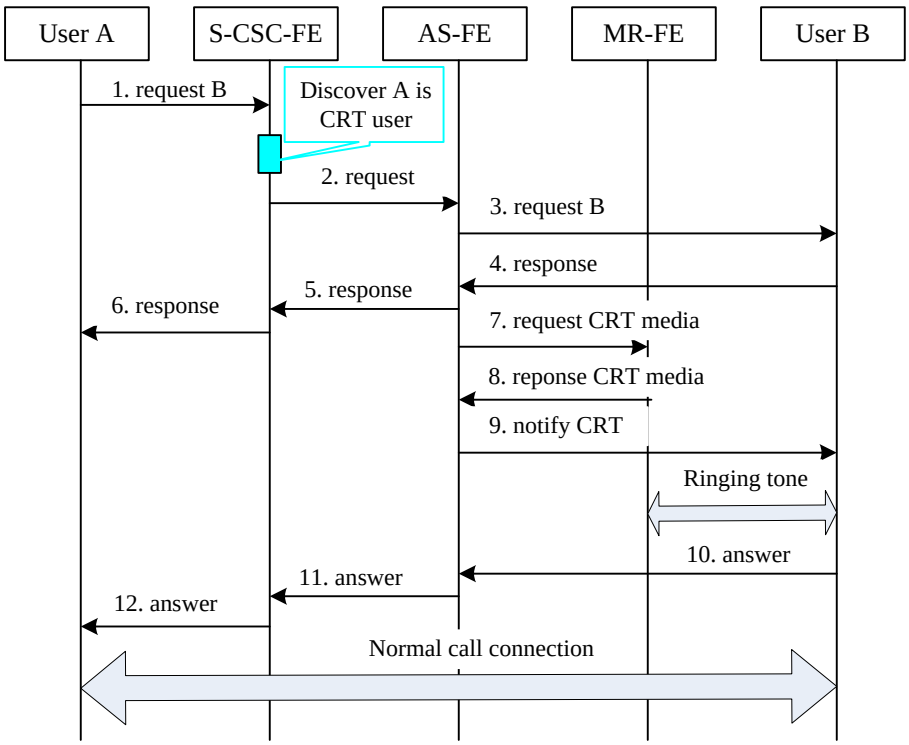

Figure 6

1, User A initiates a call.

2, the call arrives at S-CSC-FE. S-CSC-FE triggers CRT service to AS-FE according to iFC.

3, AS-FE sends a request to User B via IMS network, requiring User B to support early media session.

4, User B terminal is ringing, and returns a response, including early media session description.

5, AS-FE determines that User B support early session according to the response and returns a response to S-CSC-FE with early media session description involved in conversation.

6, S-CSC-FE transfers a response to User A terminal.

7, AS-FE sends a request to MR-FE with early media session description of User B terminal.

8, MR-FE returns negotiated early media session description to AS-FE.

9, AS-FE sends a notification to User B terminal, including negotiated early media session description. After successful media negotiation, User B can receive the media pre-configured by User A.

10, 11, 12, When User B answers, the call message is transferred to User A terminal. Then after the media session is updated, normal call connection between User A and User B is established.

8.3.3 IMS based CRT service deployment model IRT Server involved

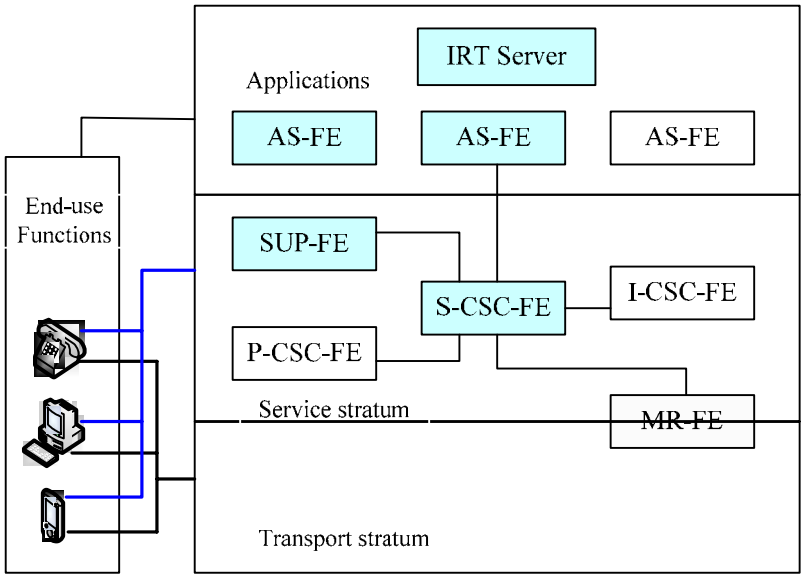

Figure 7 IRT server involved CRT service deployment model in IMS

Icon Ring Tone Server (IRT Server)

Icon Ring Tone Server (IRT Server) stores ringing tone media such as audio, video and picture files. In this model, IRT server behaves as a web server and can be provided by content providers or operators. A user terminal can interact with IRT server via, for example HTTP, to download ringing tone media. In this scenario the IRT server is involved to provide ringing tone content via HTTP. It is assumed that user A is a CRT service subscriber and has chosen a specific picture for calling user B. The specific picture file is stored in IRT server. The terminal of user B has the capability to download picture from IRT server. The generic procedures of CRT service are as following.

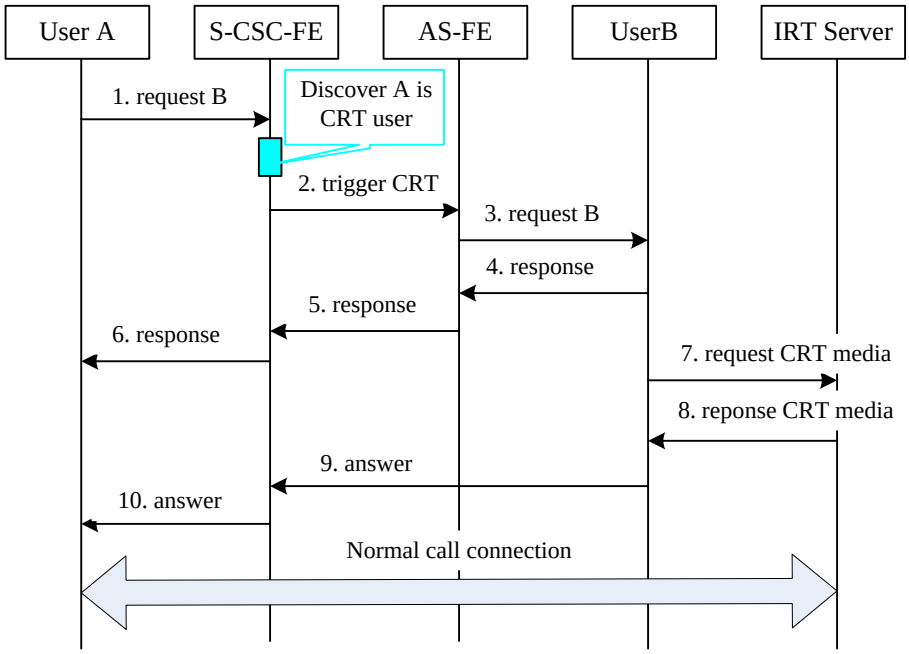

Figure 8

1, User A initiates a call.

2, the call arrives at S-CSC-FE. S-CSC-FE triggers CRT service to AS-FE according to iFC.

3, AS-FE sends a new request to user B via IMS network. The new request contains the icon resource address in which User A has pre-arranged a ring for user B.

4, User B terminal sends response to S-CSC-FE.

5, 6, AS-FE and S-CSC-FE transfers response to User A.

7, User B terminal requests CRT media from IRT server according to the resource information in message.

8, IRT server sends back response to User B terminal with picture file, and terminal displays the picture to User B.

9, User B answers the call.

10, S-CSC-FE transfer answer to User A, then normal call connection between User A and User B is established.

8.4 Converged deployment model

Convergence of CMR service includes following aspects: service application layer convergence, service control layer convergence and convergence of sharing common equipments. Service application layer convergence means that multiple networks share common service logic; service control layer convergence means that different species terminals access service application by control of same core network. The following figure shows an overall converged CMR service deployment model.

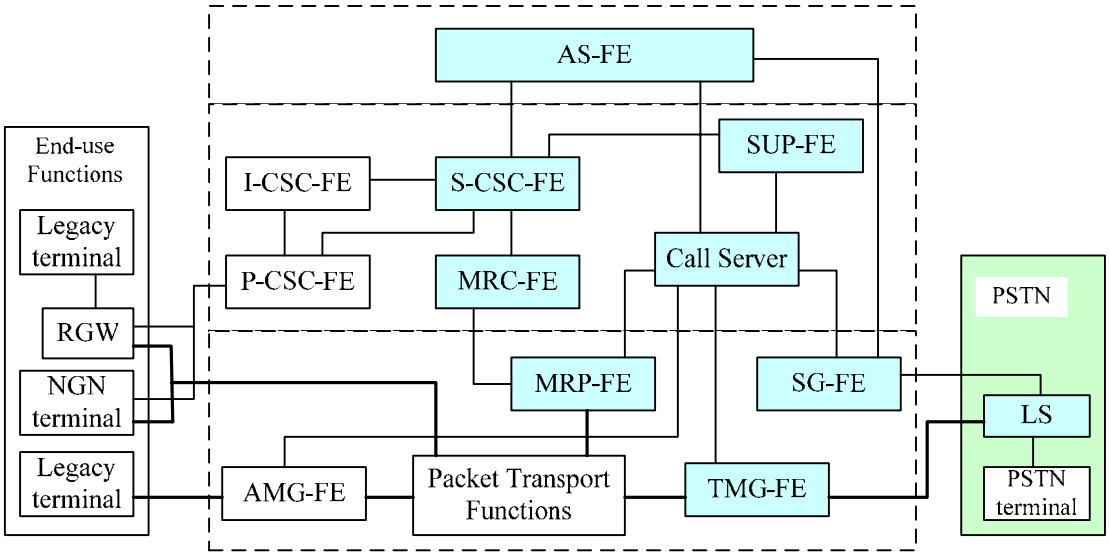

Figure 9 Converged CMR service deployment model

In this model, one AS-FE is in charge of CMR service logic, and is shared by both IMS and Call Server based NGN. Moreover, terminals in PSTN also can share the service logic in AS-FE through connect to Call Server by TMG-FE/SG-FE or through connect to P-CSC-FE by RGW.

In IMS based NGN, AS-FE, S-CSC-FE, MRC-FE and MRP-FE are involved to execute the CMR service. In Call Server based NGN, AS-FE, Call Server and MRP-FE are involved. SUP-FE is needed for both environments to store the service subscriber information.

This clause describes the different aspects of convergence to implement CMR service in converged network environment. Specially, there is no big difference between models for each service aspect of CMR service, and also because CRBT service is deployed more widely in the existing network, CRBT service is taken for an example to illustrate CMR service convergence models.

8.4.1 Convergence for PSTN and Call server based environment

In PSTN, traditional IN equipments including SCP in conjunction with IP/SSP has already provided CRBT service. It is desirable to reuse the IN functional entities to provide the CRBT service for the legacy terminal in PES. According to different existing network environments, different models can be applied. Following sections give two typical scenarios which can provide CRBT service by equipments in PSTN. In these two scenarios, both the terminals including legacy and NGN terminals in Call Server environment and the terminals in PSTN can experience the converged CRBT service, but only audio media can be supported. A scenario using AS and MRP is also given below, in this scenario, terminals share the CRBT service provided by equipments in Call Server environment and multimedia can be supported for NGN terminal in Call Server environment.

8.4.1.1 CRBT service deployment model reusing IN IP and SCP

The Call Server based PSTN/ISDN emulation component supports capabilities provided by traditional IN. The following Figure 10 is the deployment model, in which the interworking functional entities, SG-FE and TMG-FE are involved and the PSTN/IN functional entities, IP and SCP, are reused to provide the CRBT service. IP implements media resource function.

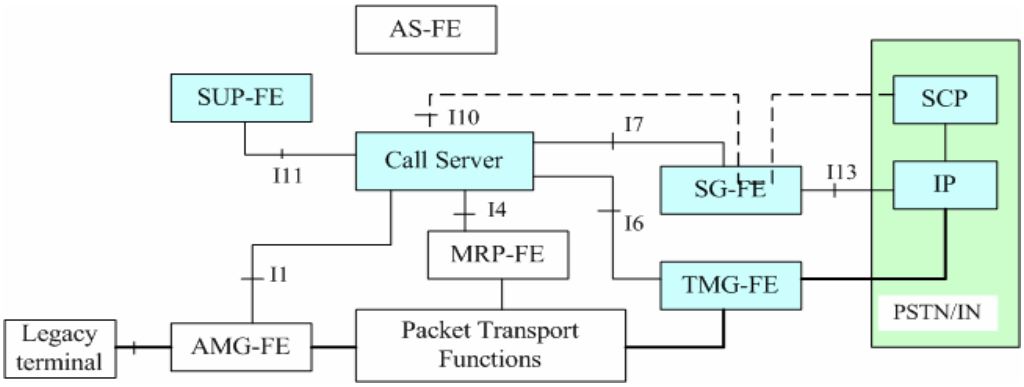

Figure 10 CRBT deployment model in CS based environment with PSTN

Notes: Interface I10 is used to carry CRBT related information through SG-FE.

In the existing narrow network, SCP and SSP/IP are providing CRBT service. Call Server is required to support standard IN interface and IN trigger criteria.

In this model, Call Server acts as SSP, and triggers the service at IN alerting trigger point. When Call Server receives the response that the User B, which is a CRBT subscriber, is being altered, Call Server triggers service to SCP requesting for CRBT media. The request will reach SCP through SG. The CRBT media will be played to calling party by IP under control of service logic in SCP.

Figure 11 shows the example service flow for this deployment model.

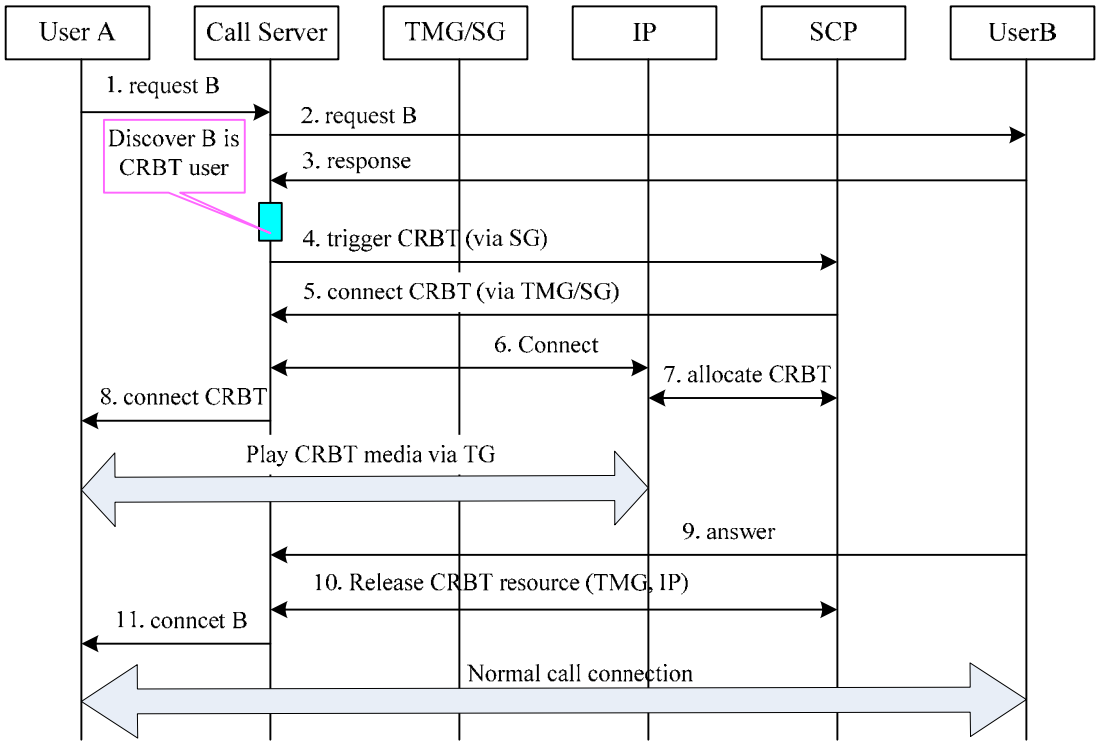

Figure 11

1, User A initiates a call to User B, the call arrives at Call Server User B belongs to.

2, Call Server connects User B terminal.

3, User B terminal is ringing, and returns response to call server.

4, Call Server triggers to SCP according to IN detect point criteria.

5, SCP instructs Call Server to connect IP.

6, Call Server establishes a connection with IP via TMG/SG.

7, after IP receives connect message from Call Server, it reports to SCP. Then SCP instructs IP to play ring back tone according to service logic and call information.

8, Call Server informs User A terminal to connect to ring back tone channel, then User A can enjoy the ring back tone pre-configured by User B.

9, User B answers the call.

10, when Call Server receives answer message, it sends a request for releasing IP resource and related call resource.

11, Call Server instructs User A terminal connect User B terminal through media stream. A normal call connection is established.

8.4.1.2 CRBT service deployment model reusing IN IP, SSP and SCP

The following Figure 12 is the deployment model, in which the interworking functional entities, SG-FE and TMG-FE are involved and the PSTN/IN functional entities, IP, SSP and SCP, are reused to provide the CRBT service. IP and SSP are integrated into single equipment called IP/SSP in figure, SSP part in IP/SSP implements service trigger function and IP part in IP/SSP implements media resource function.

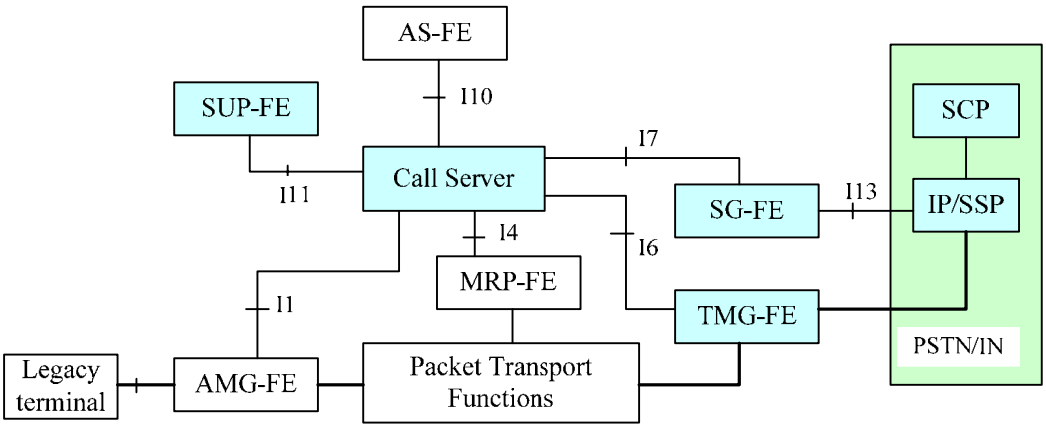

Figure 12

In this model, Call Server shall have such capability: when Call Server receives the response that the User B, which is a CRBT subscriber, is being altered, Call Server initiates a request to IP/SSP though No. 7 call message via TMG/SG. IP/SSP triggers service to SCP requesting for CRBT media. The CRBT media will be played to caller by IP/SSP under control of service logic in SCP.

Figure 13 shows the example service flow for this deployment model.

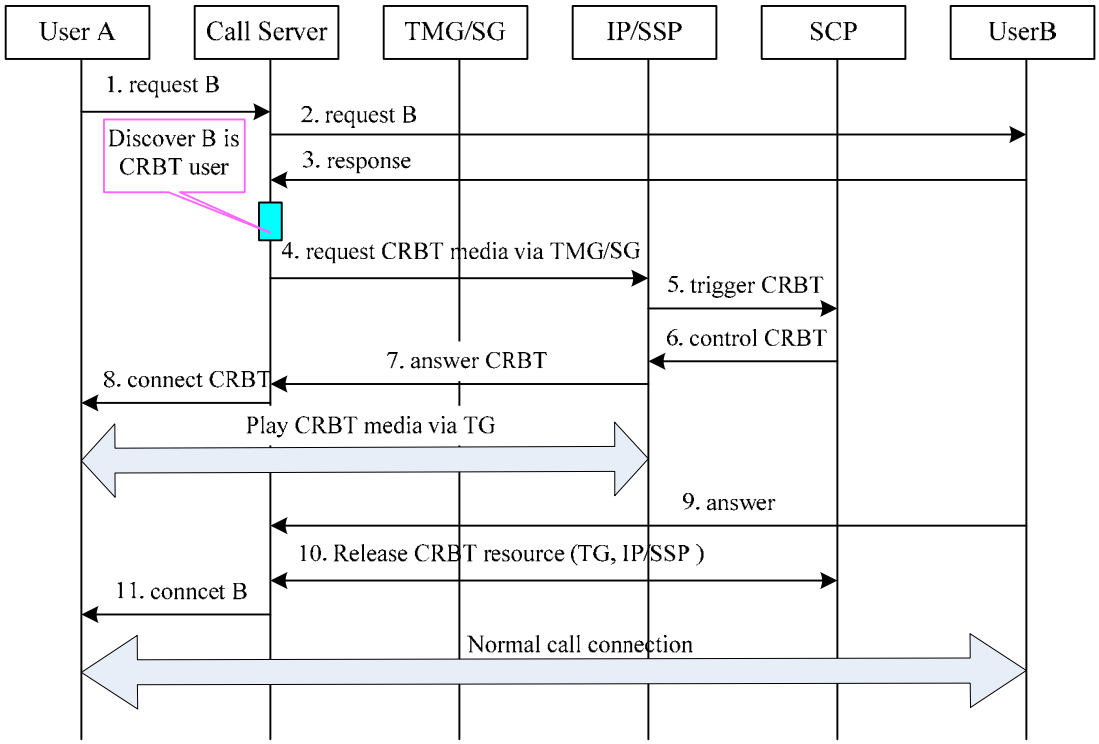

Figure 13

1, User A initiates a call to User B, the call arrives at Call Server User B belongs to.

2, Call Server connects User B terminal.

3, User B terminal is ringing, and returns response to Call Server.

4, Call Server sends a call request for CRBT media to IP/SSP via TMG/SG based on user attributes recorded in it.

5, IP/SSP triggers service to SCP through traditional Intelligence network protocol.

6, SCP returns control message to IP/SSP to instruct play ring back tone according to service logic and call information.

7, IP/SSP sends answer message to Call Server, informing to play the ring back tone via TMG/SG.

8, Call Server instructs user A terminal to connect CRBT media, then User A can enjoy the ring back tone pre-configured by User B.

9, User B answers the call.

10, when Call Server receives answer message, it sends a request for releasing IP/SSP resource and related call resource.

11, Call Server instructs User A terminal connect User B terminal through media stream. A normal call connection is established.

8.4.1.3 CRBT service deployment model using AS and MRP

Figure 14 shows service control layer convergence part of a whole CRBT service convergence in Figure 14.

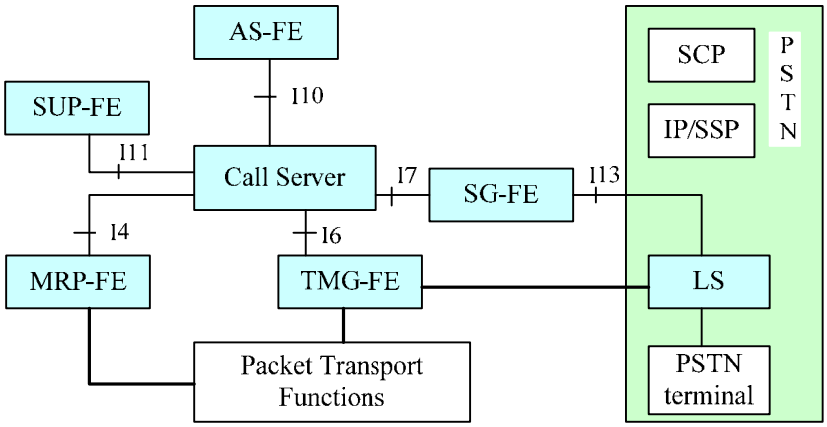

Figure 14

In this part of scenario, CRBT call requested by PSTN terminal reaches Call Server through TMG and SG. CRBT service is triggered by Call Server. PSTN terminal and terminal belongs to Call Serve environment share same CRBT service logic in AS-FE. When Call Server receives the call from PSTN or local, it transfers call to AS-FE according to user attributes or number analysis. Then AS-FE instructs Call Server to connect terminal, and informs MRP-FE to play certain ring back tone via IP connection.

It is assumed call is from PSTN in Figure 15, call originator and terminator are all PSTN users, and terminator is CRBT subscriber. Users are omitted and call is relayed by TMG/SG.

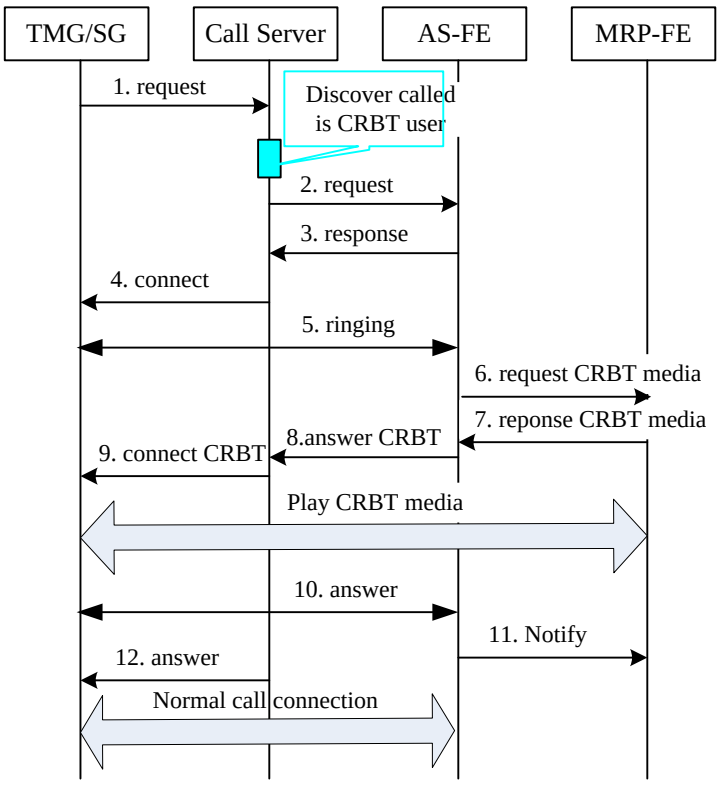

Figure 15

1, the call from PSTN arrives at Call Server through PSTN local switch called party terminal belongs to, via TMG/SG.

2, Call Server triggers CRBT service to AS-FE according to number attributes.

3, AS-FE returns response, instructing to connect called party terminal.

4, Call Server sends a connect call message via TMS/SG.

5, called party terminal is ringing, and alerting message is reported finally to AS-FE.

6, AS-FE sends a request for CRBT media to MRP-FE.

7, MRP-FE returns response with media to AS-FE.

8, AS-FE transfers answer of CRBT media to Call Server.

9, Call Server instructs user terminal to connect CRBT media via IP connection and TMG/SG to PSTN, then calling party can enjoy the ring back tone pre-configured by called party.

10, answer message is transferred to Call Server and finally to AS-FE.

11, AS-FE instructs MRP-FE stop playing media.

12, Call Server relays answer message to calling party through TMG/SG to PSTN, a normal call connection is established.

8.4.2 Convergence for IMS based and Call server based environment

In both IMS and Call Server based environment, AS is in charge of service logic, media resource equipment implements MRP function, and SIP based interface is applied between core network and AS, so convergence can be implemented in service layer.

Figure 16 shows service layer convergence part of a whole CRBT service convergence in Figure 16.

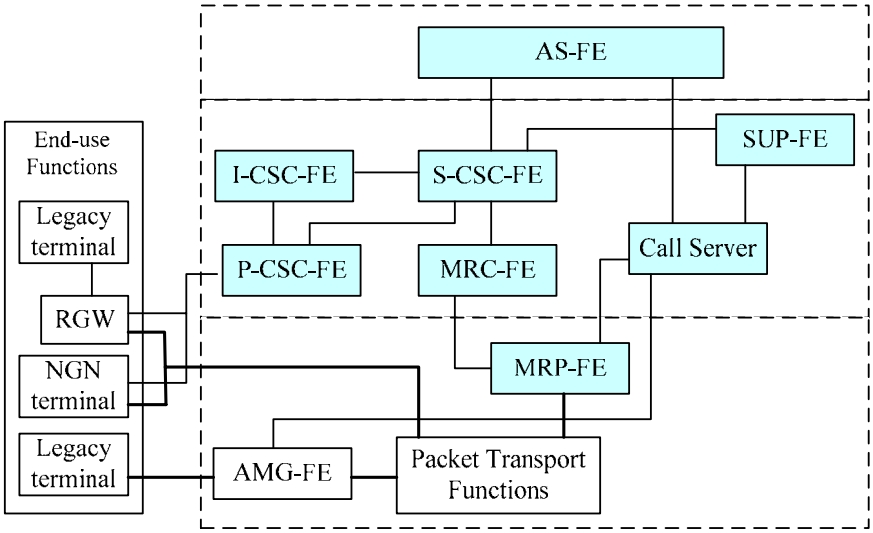

Figure 16

In this part of scenario, CRBT call requested via IMS network or Call Server based environment, triggers CRBT service to AS-FE according to subscription information or user attributes. CRBT AS-FE inquires certain customized ring back tone based on call information and other strategy, then under the control of AS-FE, calling party terminal negotiates with MRP-FE for early media session, and calling party terminal negotiates with called party terminal for communication media session. After successful negotiation, MRF-FE plays certain ring back tone to calling party through real time media stream. Finally, when called party answers call, calling party have a normal conversation with called party.

Refer information flow to flow in IMS based CRBT deployment model chapter.

8.4.3 Converged deployment model utilizing existing services

- **Overview**

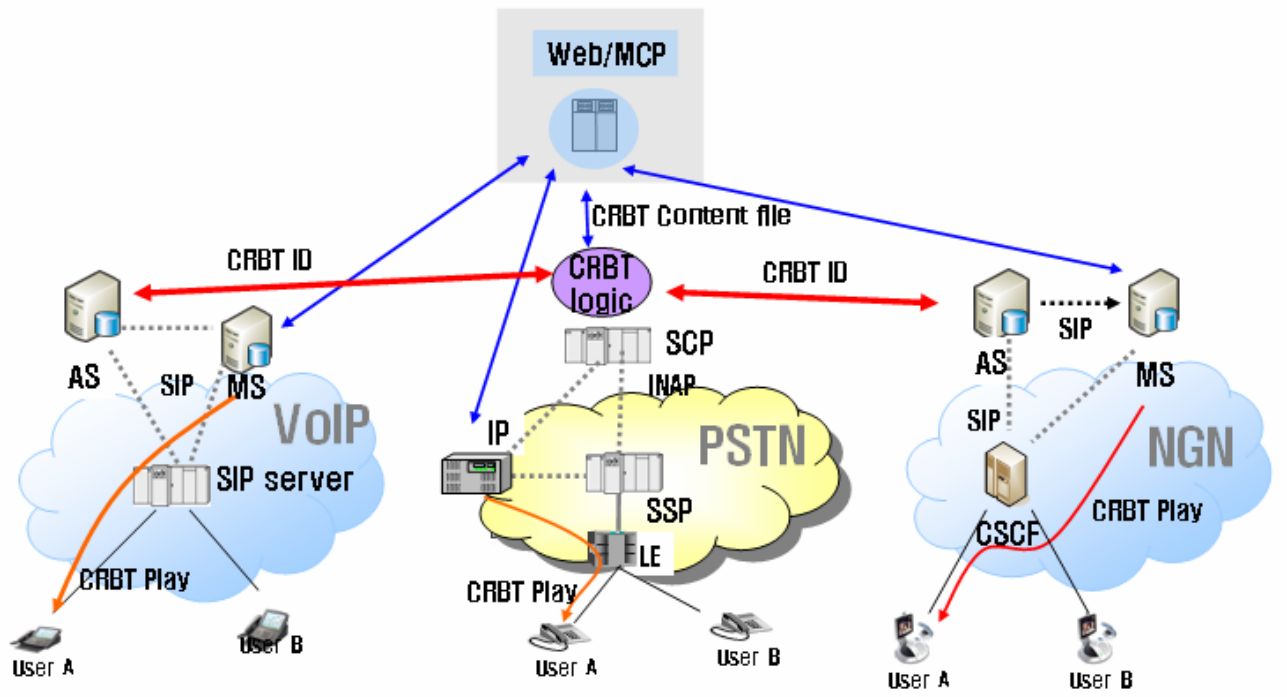

Figure 17. Converged CRBT service system architecture

Figure 17 shows that an existing application server (SCP) have subscribers' ring data and converged CRBT service logic. The SCP interworks with new VoIP AS and NGN AS to provide CRBT service.

In this development model, the SCP has CRBT logic, and other AS in other networks request CRBT ID to SCP and then process call flow. Each network has its own service architecture independently.

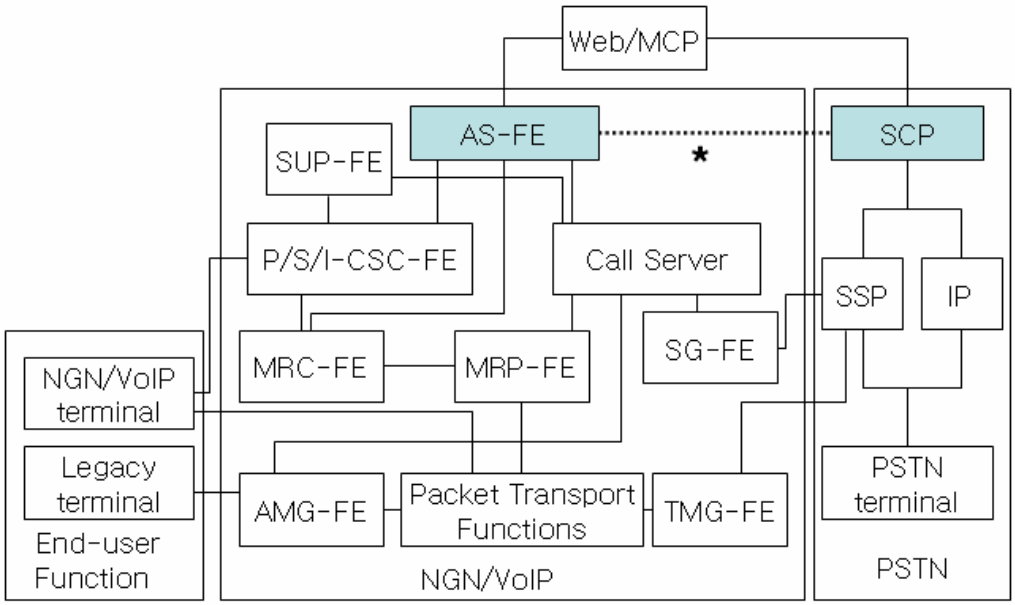

Figure 18. converged CRBT service development model

Figure 18 shows converged CRBT service development model which including NGN, VoIP and PSTN. Since the CRBT is terminating service, the called party's network system processes call trigger and call control.

If called party is on NGN, S-CSC-FE trigger to AS-FE, and the AS-FE queries CRBT ID to SCP. Then, SCP process CRBT service logic and send back CRBT ID to AS-FE. The CRBT media will be played to calling party by MRC/MRP-FE. MRC/MRP-FE play negotiated media file with calling party terminal.

When the called party is a PSTN subscriber, a LE (Local Exchanger) triggers to SSP, and SCP processes CRBT service logic independently of AS-FE. IP (Intelligent Peripheral) plays CRBT media file to the calling party. SCP needs not to ask CRBT ID to other systems unlike AS-FE, because SCP has CRBT subscriber data.

[Editor's note: in figure 18, the connection * is necessary and useful, but it is not defined in ITU-T Recommendation Y.2012. It has better to request to discuss about the connection * in Q3]

- Information flow scenario

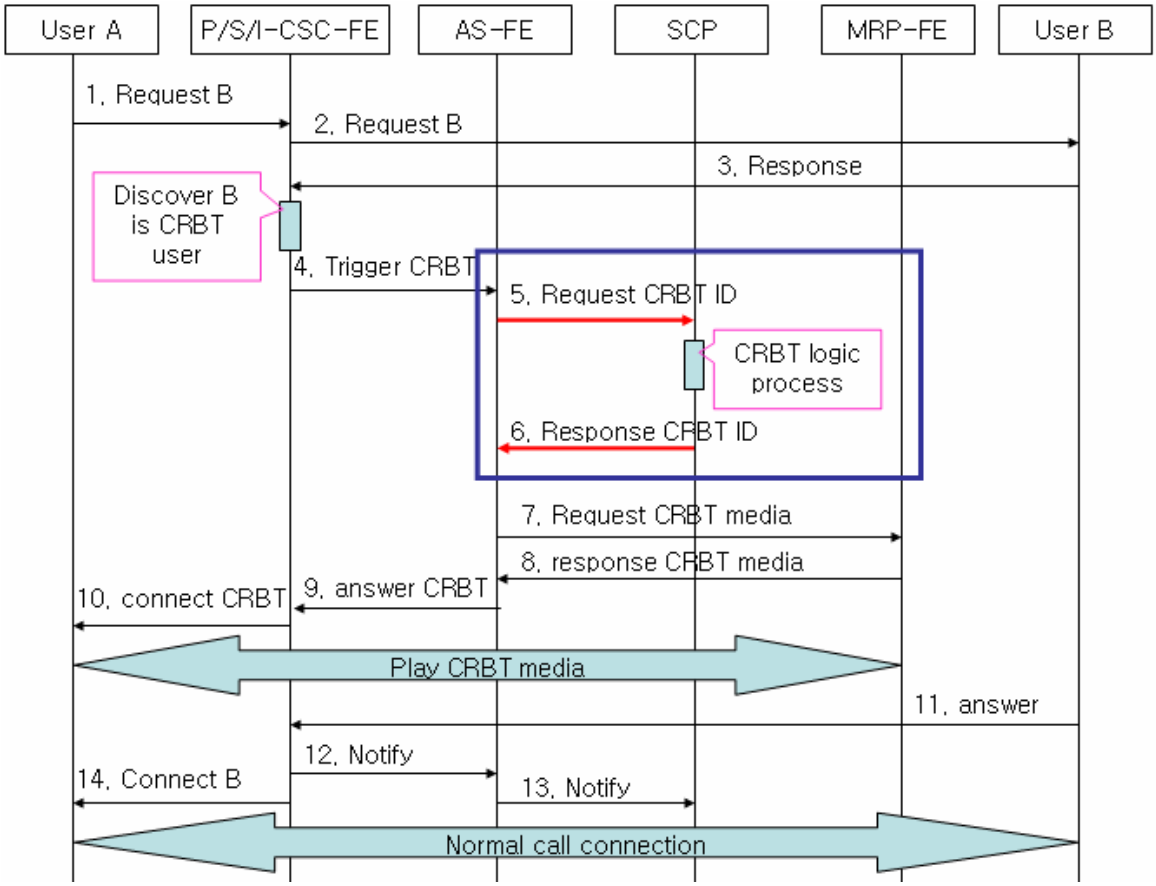

Figure 19. The additional flow in normal CRBT information flow

Figure 19 shows the converged CRBT service scenario. When user A calls to a CRBT subscriber on VoIP or NGN network, S-CSCF triggers to AS-FE Then the AS requests CRBT ID from the SCP. SCP runs CRBT logic and then it returns CRBT ID. The rest of the call flows are same with normal SIP based CRBT scenario.

9. Interworking

10 Service deployment management

In actual service deployment, the following aspects should be considered according to converged deployment model in Figure 9: CMR service Call Control, Content storage and management, User data storage and management, Service provision, Operation and maintenance (OAM), Charging.

10.1 CMR service call control

CMR service call is controlled by CMR AS-FE. CMR service logic instructs MRP-FE playing the appropriate ring tone according to the rules pre-configured by the CMR subscribers. This aspect is relevant with network deploy modes described in section 8.

10.2 Content storage and management

All the multimedia content is stored on the MRP-FE, and operators or SP/CPs shall be able to manage this content. Following capabilities shall be supported and web based management should be provided.

From operator aspects:

- Classify media content, and perform maintenance for media content information.
- Set service default ring media.
- Audit and authorize media contents uploaded by CP.
- Audit and authorize customized media contents uploaded by user.

From SP/CP aspects:

- Upload or remove media contents
- Perform maintenance for media contents

10.3 User profile storage and management

A CMR user profile is a set of stored information related to a CMR user, and it shall include two aspects: user subscription related data of CMR which is stored in service stratum and user service related data of CMR which is stored in application server.

- User data stored in service stratum

User subscription related data of CMR are stored in Service User Profile Functional Entity (SUP-FE) and it shall be provided in support of:

- authentication
- authorization
- CMR service subscription information
- CMR Service registration status (registered, not registered)
- User data stored in application server

This aspect of a CMR user profile includes, but not limited to:

- CMR Service subscription status (subscribed, unsubscribed).
- Ring back tones related to certain users which stored in ring back tone database.
- Certain playing rules of ring back tones which configured by users.
- Charging information.
- User operation log.

User service data of CMR can be stored in separate databases in the application server or in collocated databases. The CMR subscribers can modify his/her data by service provision capability. And the administrator of the CMR service can also modify subscriber's data. Creation, modification, retrieve and other management operation to CMR user profile shall be provided.

10.4 Service provision

CMR service should provide multiple interfaces to the CMR subscribers, such as IVR, Web UI, Wap UI, SMS and etc. By all these interfaces, CMR subscribers are able to perform service activation, de-activation, login, and query of the ring tone database, management of the customized ring tone library and customized information setting, etc.

10.5 Operation and maintenance

General requirements for NGN OAM capability and Management capabilities are described in Y.2201 [2]. The general requirements describe the capabilities of service and transport strata. In addition, it should provide the capabilities in application stratum as follows but not limited to:

- Performance management: The OAM FE should be able to monitor the performance for the equipments involved in service deployment, Such as: I/O usage, File system usage, CPU load, Memory usage etc.
- Configuration Management: The OAM FE should be able to modify and obtain the configuration data of the equipments of the CMR service.
- Statistics and Reporting: The OAM FE should provide statistics on events, such as number of registering CMR via different UI, number of purchasing ring tone via each UI, etc.

10.6 Charging

The billing FE archive the charging functions of the service.

Via the billing FE, CMR service can provide an interface to transfer CDRs and other charging related information to billing system. This brings very high security to the CMR service host, and favorable isolation between the CMR service host and the billing system is provided. CDRs generated can be saved as files on the CMR service host and the billing collector.

10.7 Overall logic functional entities

According to the above description, CMR subscribers, operators and SP/CPs shall be able to access the CMR service and perform the service management through management access functions including Web. With web based management, users are able to set up, download and upload ring tones conveniently over the Internet; SP/CP is able to perform ring tone operations; operator is able to administrate user and SP/CP. And with other multiple interfaces of management access functions service is handled effectively.

In order to deploy the service safely and with uniform interface, a unified portal FE should be provided to meet the requirement of multiple UI for service provision and management. The logic functional entities are described as figure 20.

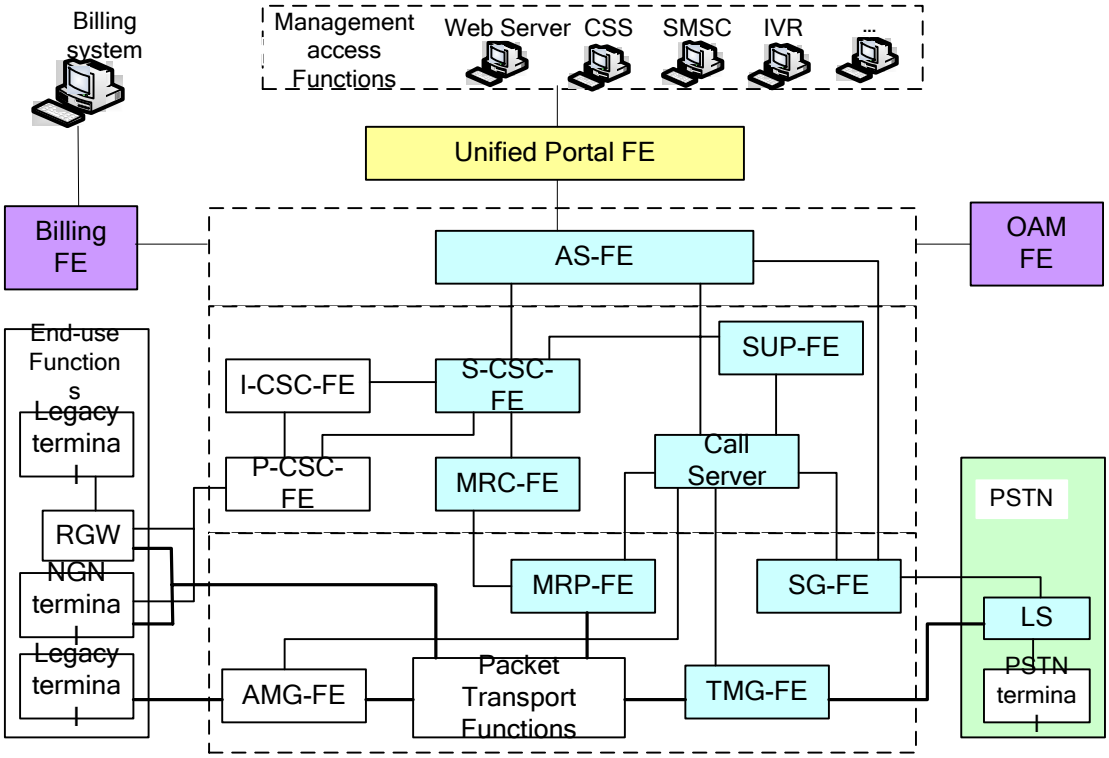

Figure 20 Converged service deployment

All the management access functions access CMR service via the Unified Portal FE. The unified portal FE should provide multiple UI, such as: web server, SMSC, IVR, WAP etc. All the UIs should invoke establish connections with the Unified Portal FE, and then communicate with the CMR service via the Unified Portal FE. And the UIs can invoke the functions to achieve the service management. The unified portal FE may be deployed as APIs and remote invocation.

11 Qos consideration

[Editor's note: this subsection should be enhanced, contributions are invited.]

General requirements of QoS shall be consistent with Y.2201 [2].

The following key performance for quality of CMR service shall be considered:

1. busy hour call completion rate, i.e. the rate of network completing the calls which CMR service users initiate under network busy traffic circumstance
2. service answering delay, i.e. time delay between service request and answer
3. charging successful rate, i.e. the rate of CMR service relevant bill being produced successfully

It shall be guaranteed that normal ordinary ring will be transmitted to user when any service un-success or overload occurs.

12 Security aspects

[Editor's note: this subsection should be enhanced, contributions are invited.]

General requirements of security shall be consistent with Y.2201 [2].

13 Charging aspects

CMR service shall be able to support following charging aspects.

- Charging Model

Charging models of CMR service fee shall include but not limit to the following items:

  - Monthly basis, i.e. service functional usage fee per month.
  - Charging per ring tone choice, i.e. ring tone purchasing, duplication, uploading and etc.
  - Charging ring tone playing rules configuring, i.e. updating ring tone playing rules.
  - Charging per ring tone usage, e.g. ring tone for advertising usage.

For each service aspect, different charging models and rates should be configurable.

- Charging Trigger

CMR service shall support online charging and offline charging function. It shall provide an interface to transfer CDRs and other charging related information between CMR service and the billing system for prepaid and post-paid billing solutions.

- Charging principle

The following principles shall be supported according to different service categories:

  - CMR service functional usage fee are paid by service subscription side. In certain cases, e.g. ring tone duplication, fee may be paid by operation side.
  - Charging only happens after the successful ring tone choice.

Annex 1 – Examples for Use Case

1.1 CRBT service

1.1.1 Default ring set by operator

Short Description:

Default ring is the ring back tone provided by service provider or operator as soon as user subscribes the CRBT service. A default ring back tone will be automatically played to replace the common ring back tone if the user has not set any ring back tone, indicating the user has subscribed the service.

Pre-conditions:
Sally has just subscribed to the service.
Sally has not set any ring back tone yet.

Service flow:

Joe calls Sally.
When Sally's phone is alerting, Joe hears a special ring back tone rather than the common beeping tone.

Sally answers call and have a conversation with Joe.

1.1.2 Default ring set by subscriber

Short Description:

The default ring back tone is the one user selects to play in the case of no special setting, and the ring back tone is played at any time and in the case of any caller number as set by customers.

Pre-conditions:
Sally has subscribed to the service.
Sally finds a music file from the existing ring back tones database via web portal, after she audits it and confirms her choice Sally sets it as a default ring successfully.

Service flow:
Joe calls Sally.
When Sally's phone is alerting, Joe enjoys the music ring tone Sally has set.

Sally answers call and have a conversation with Joe.

1.1.3 Distinctive ring for calling party

Short Description:

Users can set some personal ring back tones for special callers. After they have set ring back tones successfully, the service judges the caller of each call and plays the pre-configured music/video segment for the corresponding caller as the ring back tone.

Pre-conditions:
Sally has subscribed to the service.
Sally sets different songs for different friends according to their phone numbers. Specially, she sets the song 'Hotel California' for Joe and the song 'Here I am' for Bob.

Service flow:
Joe calls Sally.
When Sally's phone is alerting, Joe enjoys the 'Hotel California' melody.
Bob calls Sally.

When Sally's phone is alerting, Bob enjoys the 'Here I am' melody.

1.1.4 Random/sequential playback

Short Description:

Users can set personal ring back tone group, each of which can involve several ring tones. For the playback of ring tones in the ring tone group, users can set the ring tone playback rule: random playback or sequential playback.

Pre-conditions:
Sally has subscribed to the service.
Sally set a personal ring back tone group for Joe, and she sets the ring tone sequential playback.

Service flow:
Joe calls Sally.

When Sally's phone is alerting, Joe enjoys a set of songs one by one.

1.1.5 Ring Present

Short Description:

Users can present ring back tones to other users in many ways (Web, WAP, dialling of voice access number). Contents presentation means User A presents the right of using a colour ring tone to User B.

Pre-conditions:

Joe and Sally have subscribed to the service.

Service flow:
Joe pre-listens to the ring back tones.
Joe finds a ring back tone that Sally enjoys, Joe presents the ring back tone to Sally, and Joe pays for the ring back tone.

Sally owns the right of using the ring back tone.

1.1.6 Ring Duplication

Short Description:

User can duplicate the ring tones being used by other users in many ways. When User A hopes to duplicate the ring back tone being used by User B, User A can duplicate the ring back tone of User B through Web, WAP, dialling of voice access number and etc.

Pre-conditions:
Sally has subscribed to the service.
Joe has subscribed to the service.

Service flow:

Duplication during the call:
Sally calls Joe.
Sally enjoys the ring back tone very much when Joe's phone is alerting.
Sally presses the key in her terminal to indicate that she wants to duplicate this ring back tone.
The ring back tone is stored in her ring back tone database.

Duplication after the call:
Sally calls Joe.
Sally enjoys the ring back tone very much when Joe's phone is alerting.

After Sally finishes the conversation with Joe, she tries to duplicate that ring back tone to her ring back tones database via web portal.
Sally provides the information of the call just happened with Joe to portal interface.

Portal gives her a confirmation of successful duplication.

1.1.7 Intro ring

Description

Intro ring back tone is a special ring back tone to be played for several seconds before normal ring back tone. If intro ring back tone exists, the calling party will hear at least two sections of ring back tone: the first section is the intro ring back tone and from the second section the normal ring back tone is played continuously.

Intro ring back tone has the same characteristic as the normal ring back tone. Subscribers can set the intro CRBT and CRBT on the web site. They can record voice or video. And, they also can make announcement file with a TTS (Text To Speech) engine or they can choose intro CRBT file on a contents list on a web site or by phone. Subscribers can turn on/off the intro CRBT function also.

Information flow

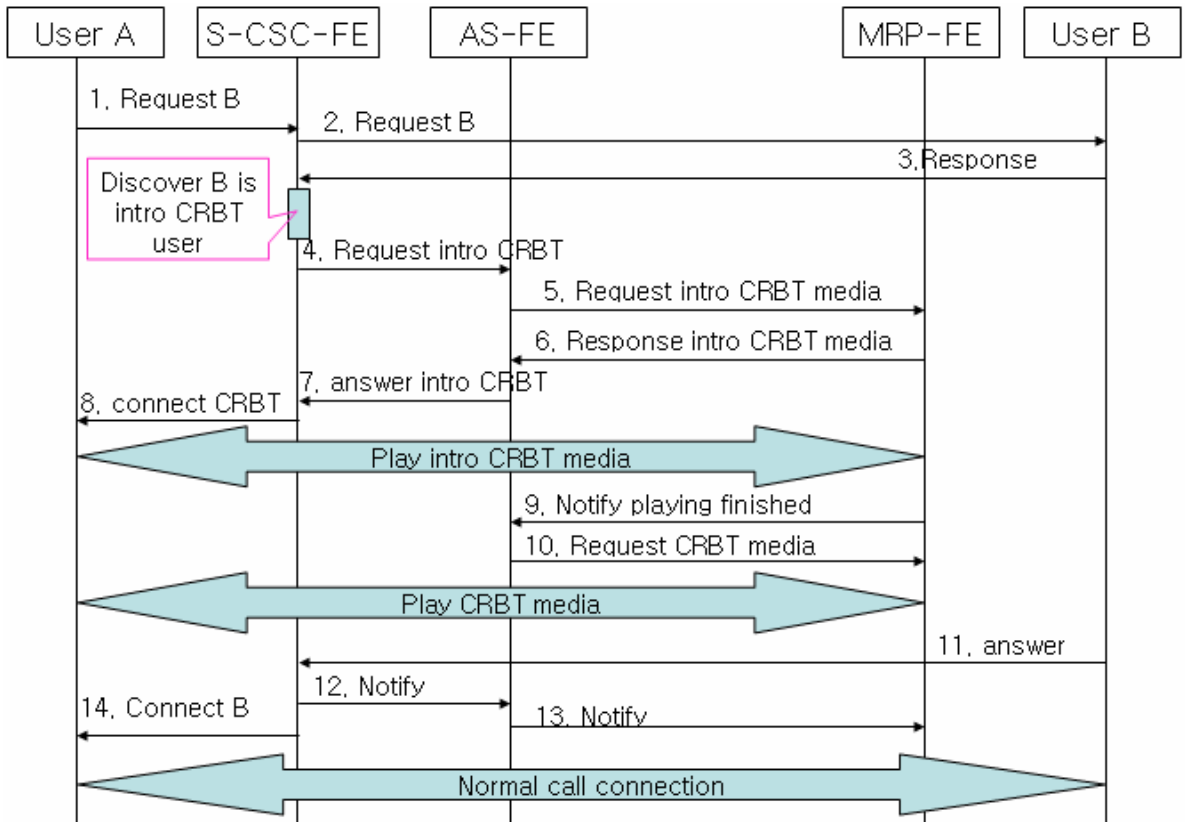

Figure1. Intro ring back tone on ring back tone flow chart

Figure 1 shows a flow chart of intro CRBT. When the first ring tone play, MRP-FE plays intro ring back tone for a while, and then plays normal CRBT continuously.

1.1.8 Ring Back Tone Filtering

Short Description:

A user makes a call to another user who subscribes CRBT service. When called party is alerting, calling party user can enjoy or reject the ring back tone pre-configured by called party user according to calling party user's filters.

Pre-conditions:
Joe has subscribed to the CRBT service and has set a piece of video as ring back tone.
Sally has set CRBT filters. E.g. if the called party user is included in her CRBT black list, the CRBT is filtered (not presented to Sally).

Service flow:
Sally calls Joe.
It's determined that Sally wants to filter the CRBT set by Joe according to Sally's filters.
When Joe's phone is alerting, Sally will not hear the video and optionally she will experience the default ring in her terminal.

Joe answers call and have a conversation with Sally.

1.1.9 CRBT continue with CBT

Short Description:

Ring back tone can be played to the calling party user or both parties after establishment of the call according to the principal's (e.g. called party/calling party, operators) preferences.

Pre-conditions:
Joe has subscribed to the service.
Joe set a special song for Sally and set that the song will be played to both of them as background music after establishment of the call.

Service flow:
Joe calls Sally.
When Sally' s phone is alerting, Joe enjoys the special song that Sally set for him.
Sally answers call and have a conversation with Joe.

Sally and Joe both enjoy the special song during call as background music.

1.2 CRT service

1.2.1 Playing ring tone

Short Description:

The user who subscribes the service makes a call to a user. When called party is alerting, called party user can enjoy ring tone which can be audio, video, flash and etc pre-configured by calling party user.

Pre-conditions:
Sally has subscribed to the service.
Sally has set a special image and a piece of video as ring tone.

Service flow:
Sally calls Joe.
When Joe's phone is alerting, Joe can see the image and hear the video.
Joe answers call and have a conversation with Sally.

1.2.2 Ring Tone Filtering

Short Description:

A user who subscribes CRT service makes a call to another user. When called party is alerting, called party user can enjoy or reject the ring tone pre-configured by calling party user according to called party user's filters.

Pre-conditions:
Sally has subscribed to the CRT service and has set a piece of video as ring tone.
Joe has set CRT filters. E.g. If it's during work time (9:00-17:00) the CRT is filtered (not presented to Joe).

Service flow:
Sally calls Joe at 10:00.
It's determined that Joe wants to filter CRT according to Joe's filters.
When Joe's phone is alerting, Joe will not hear the video and optionally he will experience the default ring in his terminal.

Joe answers call and have a conversation with Sally.

1.2.3 CRT continue with CBT

Short Description:

Ring tone can be played to the called party user or both parties after establishment of the call according to the principal's (e.g. called party/calling party, operators) preferences.

Pre-conditions:

Joe has subscribed to the service.

Joe set a special song for Sally and set that the song will be played to both of them as background music after establishment of the call.

Service flow:

Joe calls Sally.

When Sally's phone is alerting, Sally enjoys the special song that Joe set for her.

Sally answers call and have a conversation with Joe.

Sally and Joe both enjoy the special song during call as background music.

1.3 Interaction

1.3.1 CRBT service interaction with supplementary services

1.3.1.1 Interactions with CFU/CFB

Short Description:

If CFU/CFB diverts the original call which user A calls B to C, and user C subscribes CRBT service, caller user A will enjoy the ring back tone pre-configured by user C.

Pre-conditions:
Sally subscribes to the CRBT service, and pre-configures the ring back tones.
Bob subscribes to the CFB service, and forwarding number is Sally's phone number.

Service flow:
Joe calls Bob when Bob is in a conversation.
The call diverts to Sally.
Joe enjoys the ring back tone when Sally's phone is alerting.

1.3.1.2 Interactions with CFNR

Short Description:

If CFNR diverts the original call which user A calls B to C, and user B and user C both subscribe CRBT service, caller user A will enjoy the ring back tone of user B, then continuing with the ring back tone of user C.

Pre-conditions:
Sally subscribes to the CRBT service, and pre-configures the ring back tones.
Bob subscribes to the CRBT service, and pre-configures the ring back tones.
Bob subscribes to the CFNR service, and forwarding number is Sally's phone number.

Service flow:
Joe calls Bob, and occasionally Bob does not answer the call.
The call diverts to Sally.
Joe enjoys the ring back tone of Bob when Bob's phone is alerting, then enjoys the ring back tone of Sally when Sally's phone is alerting.
Alternative flow：
When the call is diverted to Sally and Sally's phone is alerting, Joe can still enjoy the ring back tone of Bob.

1.3.2 CRT service interaction with supplementary services

1.3.2.1 Interactions with OIR

Short Description:
If user A subscribes both OIR service and CRT service, user B can not enjoy the ring tone pre-configured by user A when user A calls B.

Pre-conditions:
Sally subscribes to CRT service, and sets the image as ring tone.
Sally's OIR service is active at that moment.

Service flow:
Sally calls Joe.
Joe can not see the image of sally.

1.3.2.2 Interactions with CFU/CFB

Short Description:

If CFU/CFB diverts the original call which user A calls B to C, and user A subscribes CRT service, user C will enjoy the ring tone pre-configured by user A.

Pre-conditions:
Sally subscribes to the CRT service, and pre-configures her image as ring tone.
Bob subscribes to the CFB service, and forwarding number is Joe's phone number.

Service flow:
Sally calls Bob when Bob is in a conversation.
The call diverts to Joe.
Joe enjoys Sally's image when his phone is alerting.

1.3.2.3 Interactions with CFNR

Short Description:

If CFNR diverts the original call which user A calls B to C, and user A subscribes CRT service, user B and C can both enjoy the ring tone of user A.

Pre-conditions:
Sally subscribes to the CRT service, and pre-configures her image as ring tone.
Bob subscribes to the CFNR service, and forwarding number is Joe's phone number.

Service flow:
Sally calls Bob, and occasionally Bob does not answer the call, but the image still appears in his phone.
The call diverts to Joe.
Joe enjoys Sally's image when his phone is alerting.